TS-05

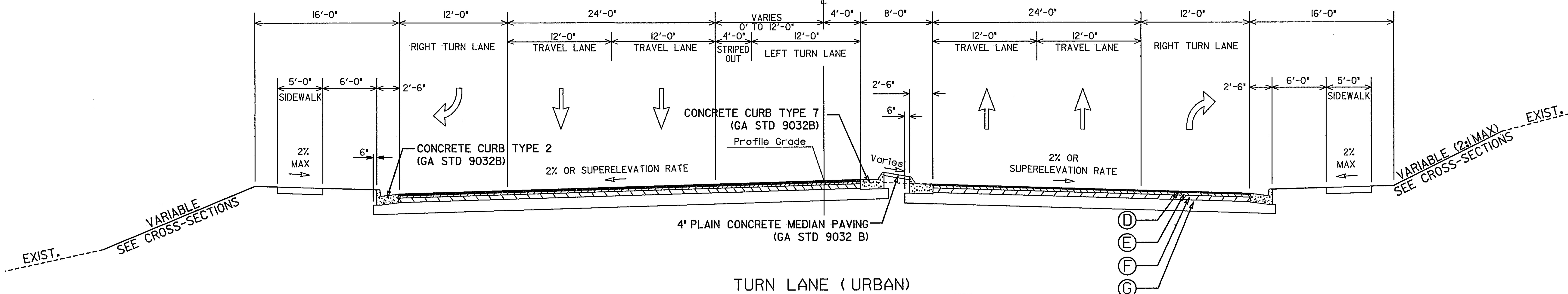

TURN LANE (URBAN)

SEE PLANS FOR LOCATIONS

TS-06

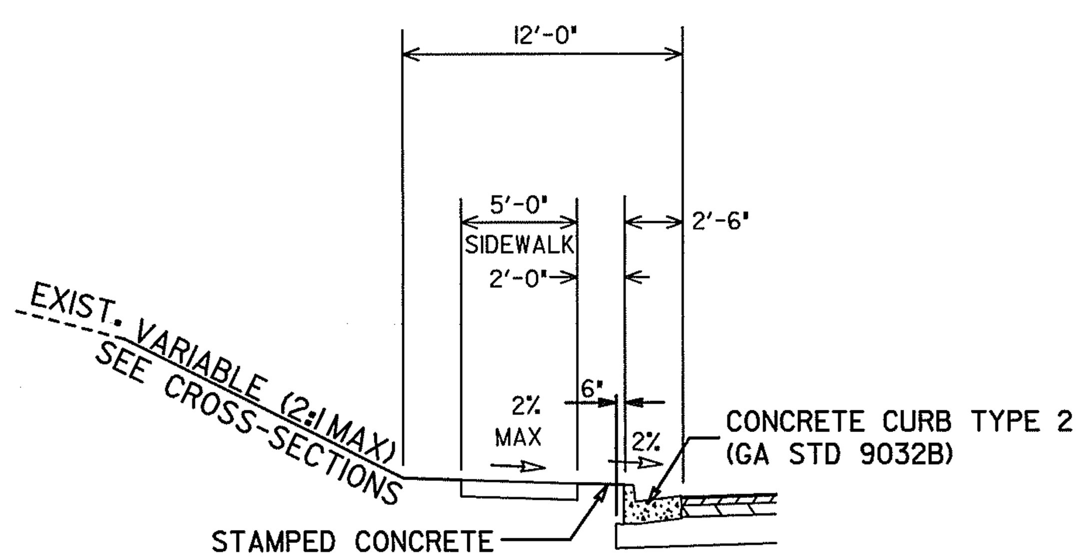

APPLIES TO
STA. 221+00 TO STA. 239+50 LT

TS-07

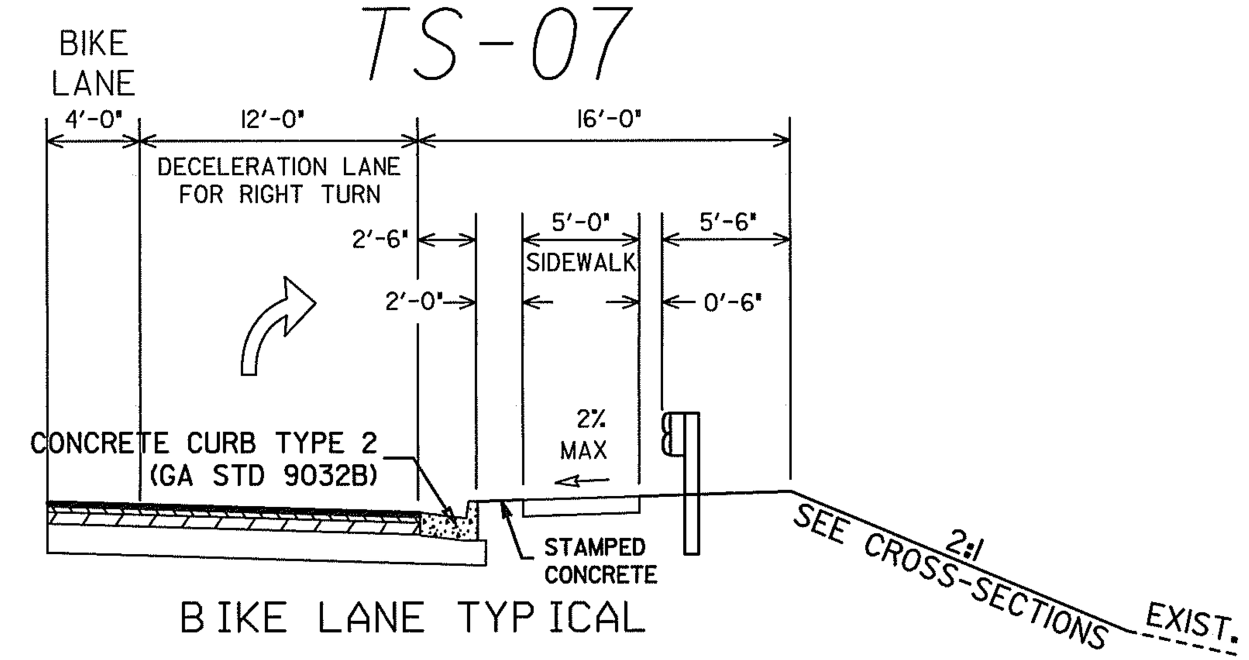

BIKE LANE TYPICAL

BIKE LANE STA 177+40 TO 195+00 RT

GUARDRAIL APPLIES TO
STA. 179+00 TO STA. 182+80 LT

GUARDRAIL APPLIES TO
STA. 179+50 TO STA. 181+09 RT

TS-08

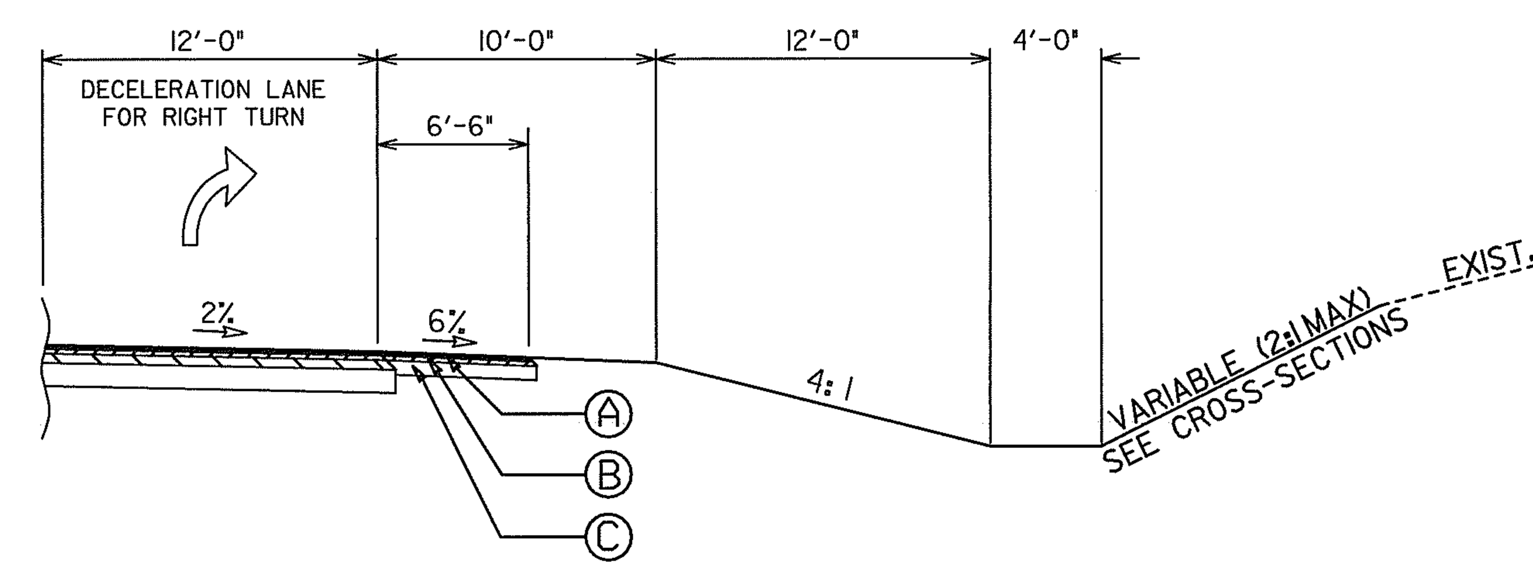

TURN LANE (RURAL)

SEE PLANS FOR LOCATIONS

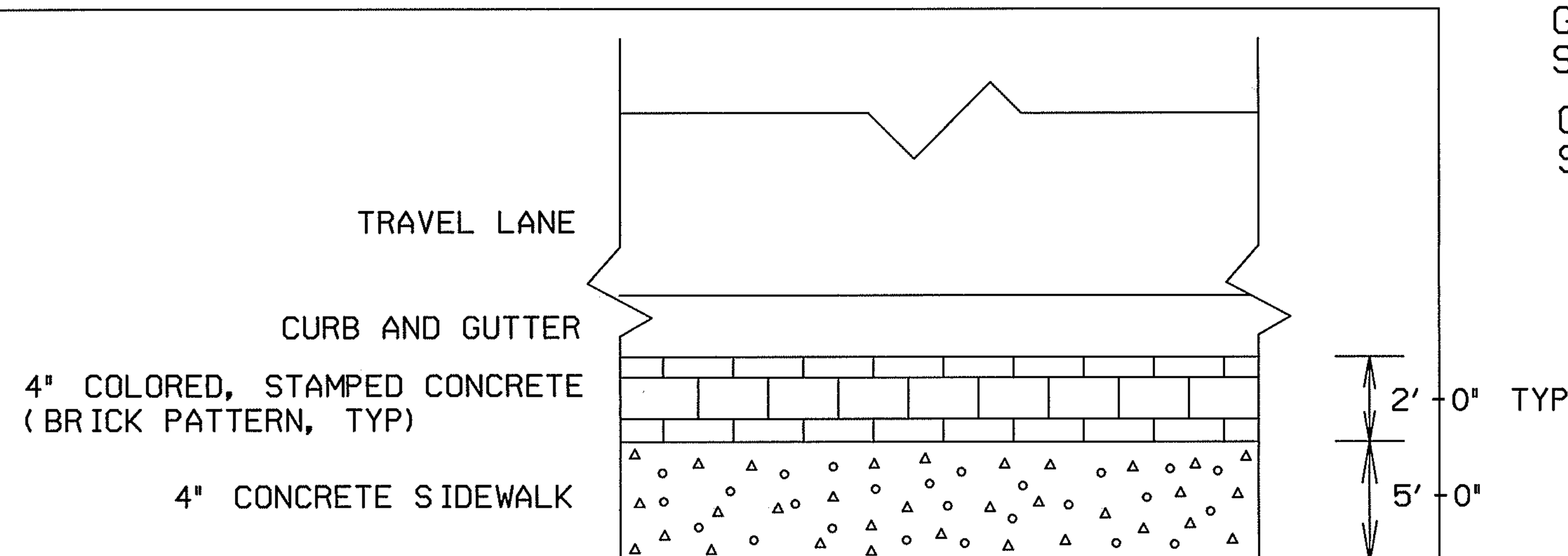

PLAN VIEW DETAIL FOR PLACEMENT OF COLORED, STAMPED CONCRETE

STATION
221+00 TO 239+50 LT
179+00 TO 182+80 LT
179+50 TO 181+09 RT

*NOTE: COLORED, STAMPED CONCRETE SHALL BE MEASURED AND PAID FOR UNDER ITEM NUMBER 441-0104 CONCRETE SIDEWALK, 4 IN. THE COLOR SHALL BE TILE RED, FEDERAL STANDARD 595B, COLOR # 31310

SHOULDERS

- (A) 1.5" (165 LB/SY) 12.5 mm SUPERPAVE
- (B) 2" (220 LB/SY) 19 mm SUPERPAVE
- (C) 6" GRADED AGGREGATE BASE CRS, INCL MATL

FULL DEPTH PAVEMENT

- (D) 1.5" (165 LB/SY) 12.5 mm SUPERPAVE
- (E) 4" (440 LB/SY) 19 mm SUPERPAVE
- (F) 5" (550 LB/SY) 25 mm SUPERPAVE
- (G) 12" GRADED AGGREGATE BASE CRS, INCL MATL

MULKEY
ENGINEERS & CONSULTANTS
1255 CANTON STREET, SUITE G
ROSWELL, GEORGIA 30075
(678) 461-3511

DRAWING NOT TO SCALE

REVISION DATES		
9/9/09		

STATE OF GEORGIA
DEPARTMENT OF TRANSPORTATION

OFFICE: CONSULTANT DESIGN

TYPICAL SECTIONS

SR 74 RIGHT AND LEFT TURN LANES, & LOCATIONS FOR SIDEWALK AND BICYCLE LANES

DRAWING No. 5-05