TS-04

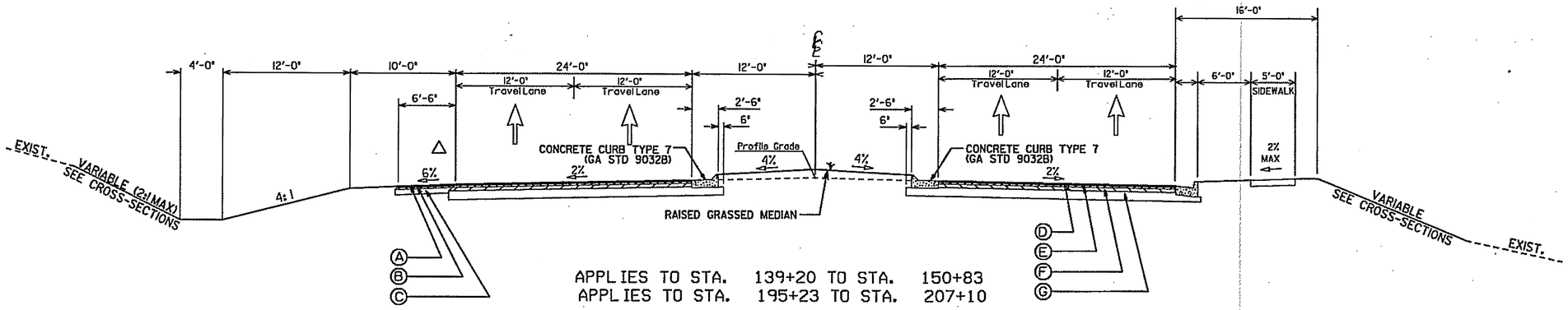

APPLIES TO STA. 139+20 TO STA. 150+83
APPLIES TO STA. 195+23 TO STA. 207+10

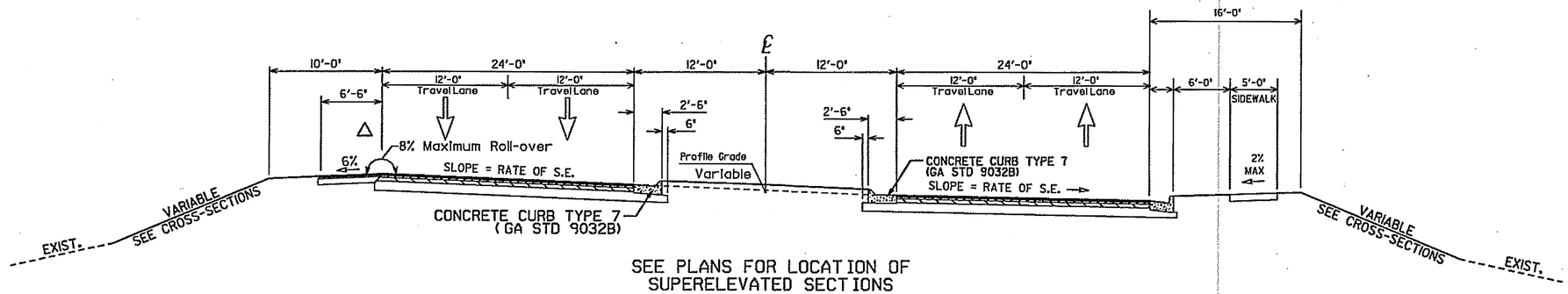

SEE PLANS FOR LOCATION OF
SUPERELEVATED SECTIONS

SEE DRAWING 5-05 FOR LOCATION AND DETAILS OF SHOULDERS, LEFT TURN & RIGHT TURN LANES, BICYCLE LANES & SIDEWALKS.

△ *SEE CONSTRUCTION DETAIL S-8 FOR MILLED RUMBLE STRIPS.*

SHOULDERS		
Ⓐ	1.5"	(165 LB/SY) 12.5 mm SUPERPAVE
Ⓑ	2"	(220 LB/SY) 19 mm SUPERPAVE
Ⓒ	6"	GRADED AGGREGATE BASE CRS, INCL MATL

FULL DEPTH PAVEMENT		
Ⓓ	1.5"	(165 LB/SY) 12.5 mm SUPERPAVE
Ⓔ	4"	(440 LB/SY) 19 mm SUPERPAVE
Ⓕ	5"	(550 LB/SY) 25 mm SUPERPAVE
Ⓖ	12"	GRADED AGGREGATE BASE CRS, INCL MATL

MULKEY ENGINEERS & CONSULTANTS
1255 CANTON STREET, SUITE G
ROSWELL, GEORGIA 30075
(678) 461-3511

DRAWING NOT TO SCALE

REVISION DATES

STATE OF GEORGIA
DEPARTMENT OF TRANSPORTATION
OFFICE: CONSULTANT DESIGN

TYPICAL SECTIONS

SR 74

DRAWING No. 5-04