STATE	PROJECT NUMBER	SHEET NO.	TOTAL SHEETS
GA.	STP-209-1(1)	422C	513

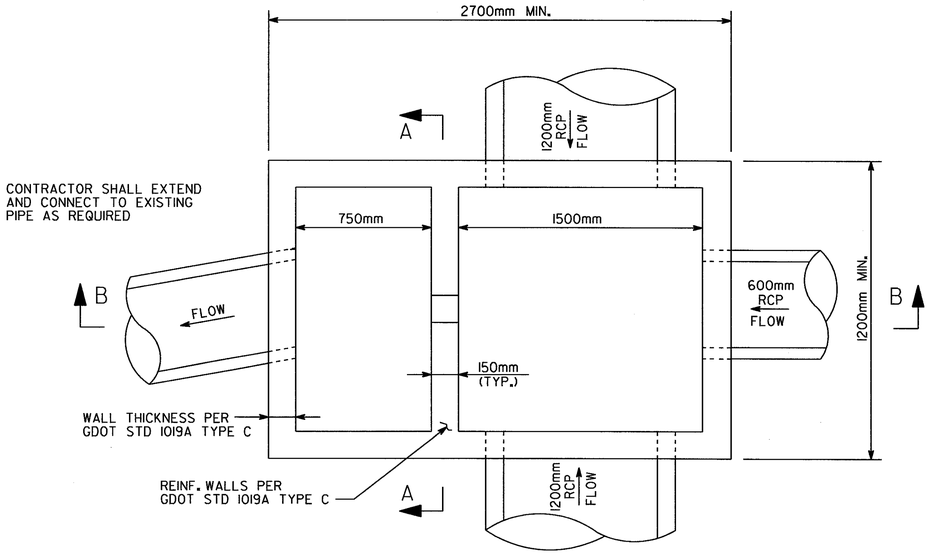

PLAN (W/O TOP SLAB)

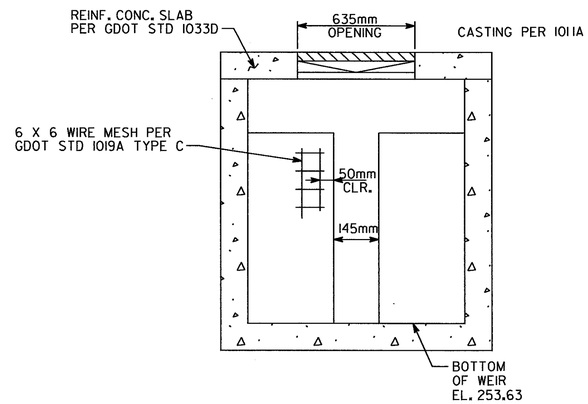

SECTION A-A

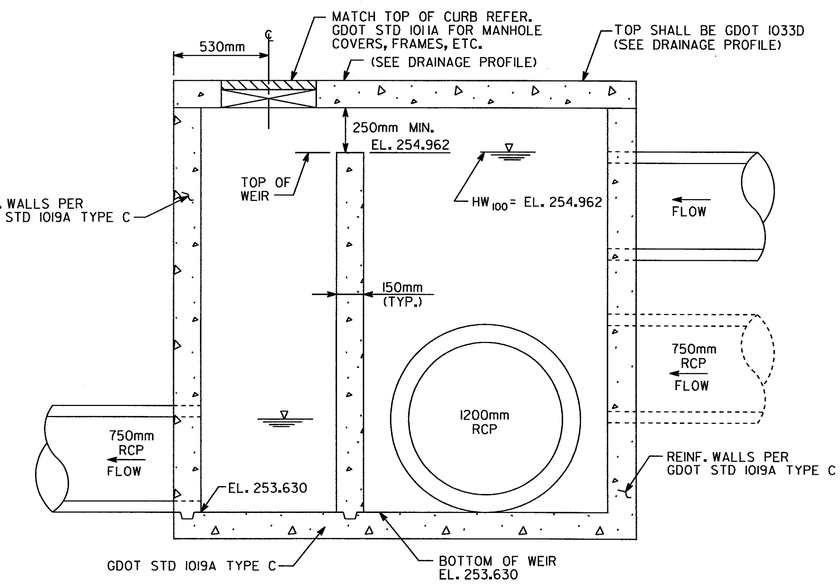

SECTION B-B

CONSTRUCTION NOTES

CONSTRUCT THE STORMWATER CONTROL STRUCTURE WITH POURED-IN-PLACE OR PRECAST CONCRETE.

IN WALLS THAT FORM THE WEIR USE REINFORCING STEEL THAT IS 2/2, 6 X 6 WELDED WIRE FABRIC ROLLED TO THE DIMENSIONS AS SHOWN ABOVE OR FABRICATED TO PROVIDE A MINIMUM CLEARANCE OF 50 mm (2 in.). AS AN ALTERNATIVE, REINFORCING BARS 12mm (1/2 in.) IN DIAMETER SPACED AT 300 mm (12 in.) CENTER TO CENTER VERTICAL AND HORIZONTAL MAY BE USED.

TIE REINFORCING OF THE WALLS TO THE BOTTOM SLAB REINFORCING

MINIMUM OF THREE - ¾"Ø STEEL LADDERS BARS ARE REQUIRED IN ALL DROP INLETS WHERE n IS GREATER THAN 1200mm.

NUMBER AND LOCATION OF LADDER BARS IN DROP INLET TO BE AS DIRECTED BY THE ENGINEER.

PLASTIC OR RUBBER COATED M.H. STEPS APPROVED BY THE LABORATORY AND INSTALLED PER MANUFACTURERS RECOMMENDATIONS MAY BE SUBSTITUTED FOR THE LADDER BARS SHOWN.

ALL COSTS ASSOCIATED WITH THE STORM WATER CONTROL STRUCTURES SHALL BE INCLUDED IN ITEM 668-5005 JUNCTION BOX, SPECIAL DESIGN.

JBT J.B. TRIMBLE, INC.
2550 Heritage Court, SE
Suite 250
Atlanta GA 30339-3062

GEORGIA
DEPARTMENT OF TRANSPORTATION
PRECONSTRUCTION DIVISION-OFFICE OF CONSULTANT DESIGN

STORMWATER CONTROL STRUCTURE

STATION 16+199 (BB-5)

STP-209-1(1)

SCALE: NOT TO SCALE

APRIL 2006

BY	REVISIONS	DATE
	SHEET ADDED	6-13-06

GEORGIA REGISTERED PROFESSIONAL ENGINEER NEIL BOTTS 6-13-06 ROBERT LYNN FORSELL

SHEET 1 OF 1

DESIGNED RLF | CHECKED JKM | REVIEWED SLP
DRAWN ITD | DESIGN GROUP YT | APPROVED PVL

USE ON CONSTRUCTION

313051\CR204