STATE	PROJECT NUMBER	SHEET NO.	TOTAL SHEETS
GA.	STP-209-1(1)	4 of 8	5 of 13

Metric

WIDENED RIGHT SIDE
(DETAIL 1)

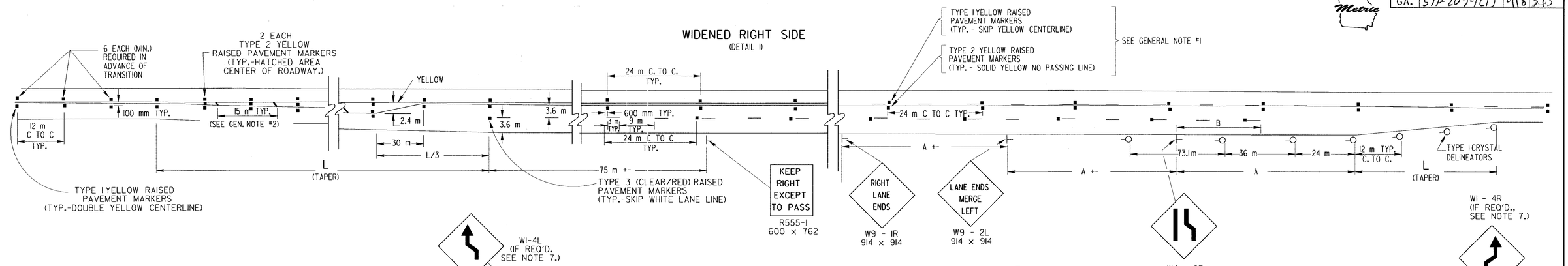

WIDENED LEFT AND RIGHT SIDES
(DETAIL 2)

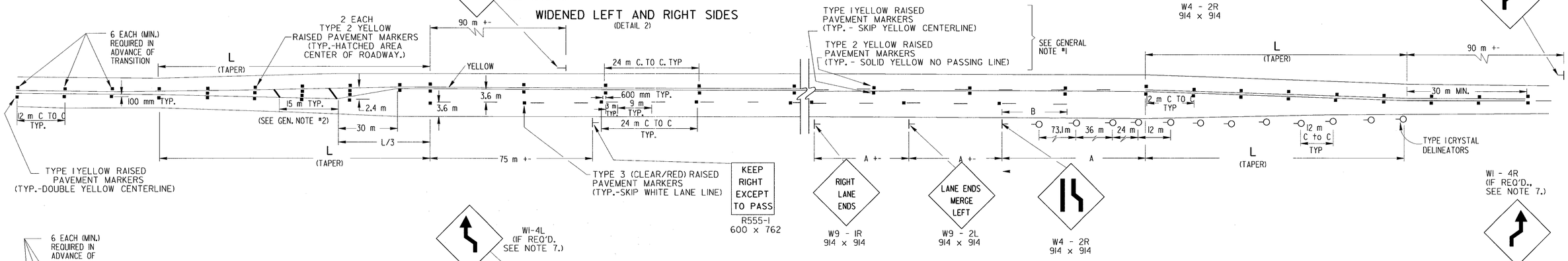

WIDENED LEFT SIDE FOR PASSING LANE ON RIGHT SIDE
(DETAIL 3)

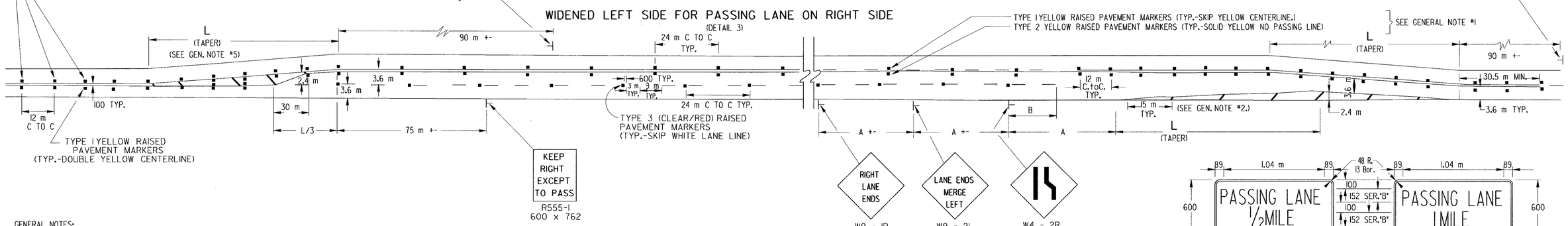

GENERAL NOTES:

1. PASSING-NO PASSING MARKINGS FOR TRAFFIC TRAVELING IN THE SINGLE LANE DIRECTION ARE TO BE DETERMINED BY THE AVAILABLE PASSING SIGHT DISTANCE .
2. DIAGONAL STRIPES ARE TO BE 600 mm IN WIDTH AND PLACED ON AN ANGLE OF 45^ WITH CENTERLINE. (15 m C. TO C. TYP.)
3. RAISED PAVEMENT MARKERS AS SHOWN SHALL BE USED IN ALL CASES AND AS REQUIRED IN GEN. NOTE NO. 5 BELOW.
4. WHERE SPACE DOES NOT PERMIT PLACEMENT OF THE FULL SEQUENCE OF WARNING SIGNS SHOWN, THEN THE WARNING SIGN W9-2L(R) MAY BE OMITTED. IF SPACE FURTHER PROHIBITS PLACEMENT, THEN THE WARNING SIGN W9-1R(L) MAY ALSO BE OMITTED LEAVING ONLY THE W4-2R(L) SIGN. THE W4-2R(L) SIGN IS REQUIRED IN ALL CASES.
5. WHERE AN EXISTING ROADWAY IS WIDENED ON THE LEFT (SEE DETAIL 3) OF EXISTING PAVING, TO ADD A PASSING LANE, THE WIDENING SHOULD BE ACCOMPLISHED GEOMETRICALLY. IF THERE ARE NOT ANY EXISTING HORIZONTAL CURVES AT THE LOCATION OF A PASSING LANE, A TAPER OFFSET OF 1:50 IS PERMISSABLE, RAISED PAVEMENT MARKERS SHALL BE INSTALLED WITH WIDENING ON THE LEFT SIDE AS SHOWN IN DETAIL 3 ABOVE.
6. TAPER LENGTHS SHALL BE EQUAL TO THE MINIMUM OR GREATER, BASED ON THE M.U.T.C.D. FORMULAS SHOWN BELOW.
7. WI-4 SIGNS ARE TO BE OMITTED EXCEPT AT LOCATIONS AS SPECIFIED BY THE ENGINEER.
8. EITHER A D 13-3 SIGN OR A D 13-4 SIGN, AS SPECIFIED IN THE PLANS OR BY THE ENGINEER, MAY BE REQUIRED IN ADVANCE OF EACH PASSING LANE; THESE SIGNS WILL HAVE A WHITE REFLECTORIZED LEGEND AND BORDER ON A GREEN REFLECTORIZED BACKGROUND.

TAPER FORMULA: $L = 0.6SW$ FOR SPEEDS OF 70 km/h OR GREATER
$L = WS^2/155$ FOR SPEEDS OF 60 km/h OR LESS

WHERE: L = MINIMUM LENGTH OF TAPER, IN meters
S = POSTED SPEED LIMIT OR 85 PERCENTILE SPEED (km/h)
W = WIDTH OF OFFSET, meters

R 555-1

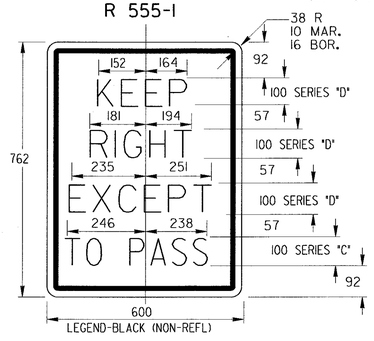

POSTED SPEED (METERS)		DISTANCE (METERS)	
MPH	km/h	A	B
55	90	215	107
45	70	170	85
35	60	120	60

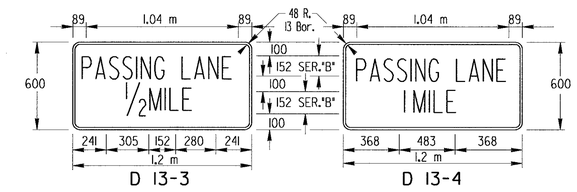

NOTE: DIMENSIONS ARE IN MILLIMETERS UNLESS SPECIFIED OTHERWISE.

12-09-96	DATE	DEPARTMENT OF TRANSPORTATION STATE OF GEORGIA	
SPEED-DISTANCE CHART	REVISION	STANDARD TAPERS, SIGNS, AND MARKINGS FOR PASSING LANES (METRIC) JUNE 1996	
RMJ	BY	DES. ____ (SUBMITTED) STATE ROAD & AIRPORT DESIGN ENGR. DRW. ____ TRA. ____ (APPROVED) CHIEF ENGINEER CHK. ____	NUMBER 9121

4/12/2006 2:19:51 PM \\GDOT-DSN\GOPLOT\OCF\go_kla8000.paper_36x24.pcf mgavins k:\RoadDesign\StandardsandConstructionDetails\Standards\Metric_Standards (.PRF)\M9121.prf GO-RE4