STATE	PROJECT NUMBER	SHEET NO.	TOTAL SHEETS
GA.	STP-209-1(1)	391	813

Metric

CATCH BASIN

(IF CATCH BASIN HAS LONG LONGITUDINAL PIPE OVER 600 mm, SEE DETAILS AT RIGHT)

NOTE: OPENING FOR PIPE SHALL BE THE OUTSIDE DIAMETER OF THE REQUIRED PIPE PLUS 25 mm MINIMUM OPENING SHALL HAVE CORRUGATIONS.

NOTE FOR ALL CATCH BASINS

12 mm EXPANSION JOINT MATERIAL SHALL BE PLACED AROUND THE CATCH BASIN WHERE SIDEWALK OR MEDIAN PAVEMENT IS PLACED ADJACENT TO THE CATCH BASIN

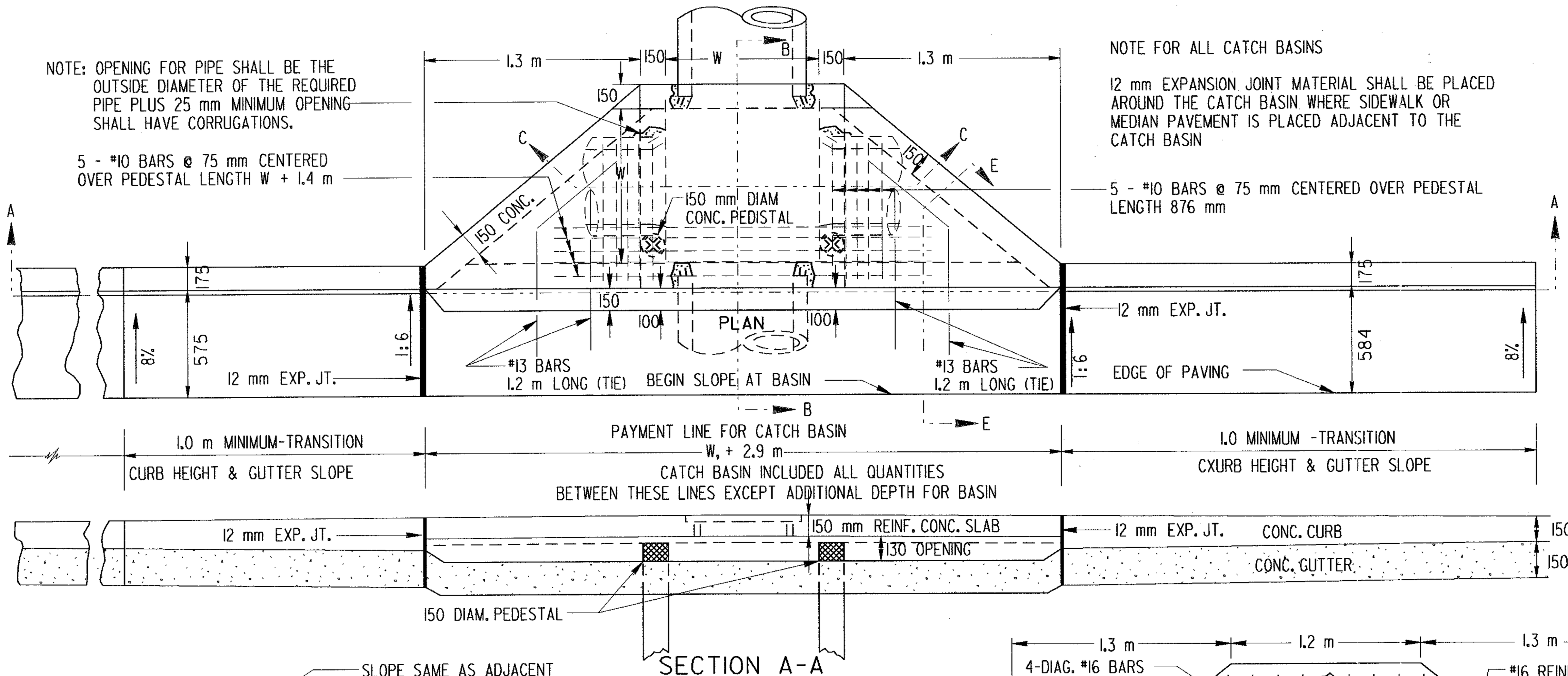

CATCH BASIN (TYPICAL FOR CATCH BASIN WITH LONGITUDINAL PIPE OVER 600)

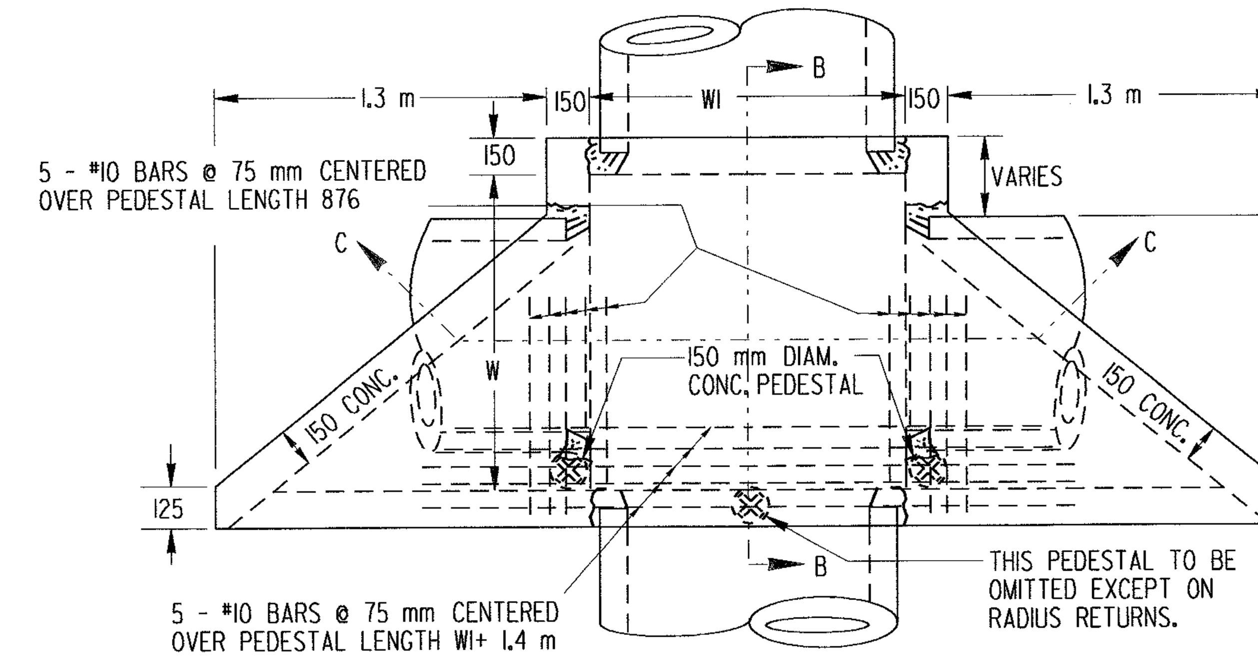

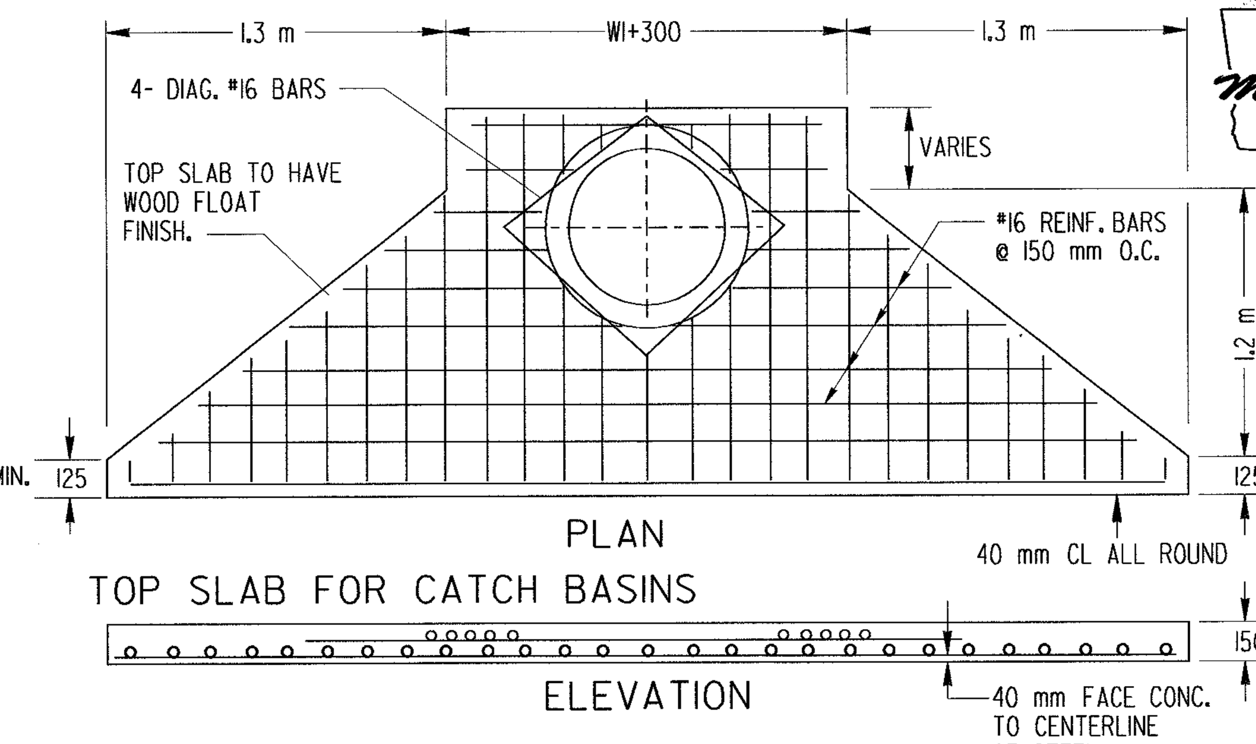

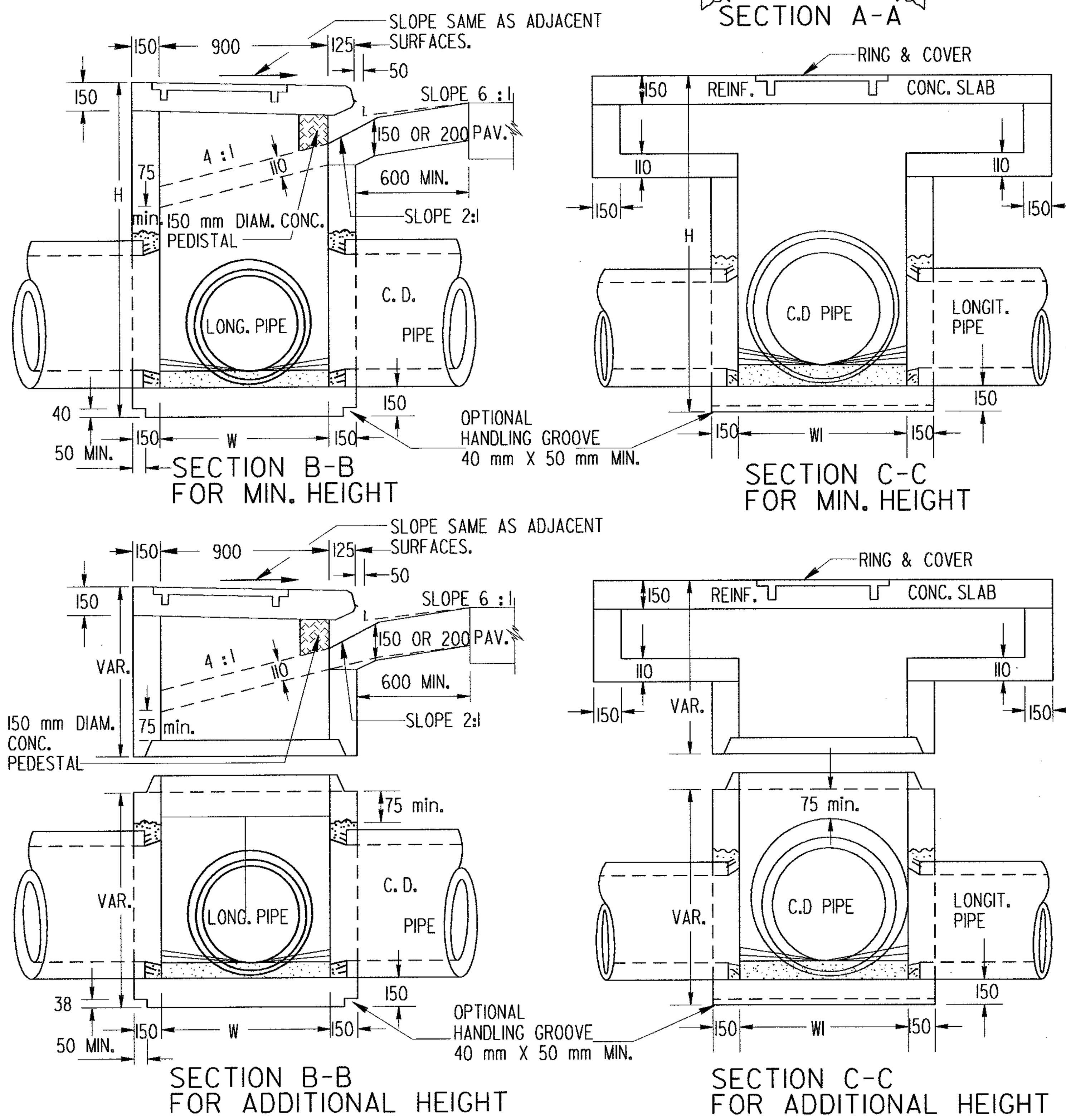

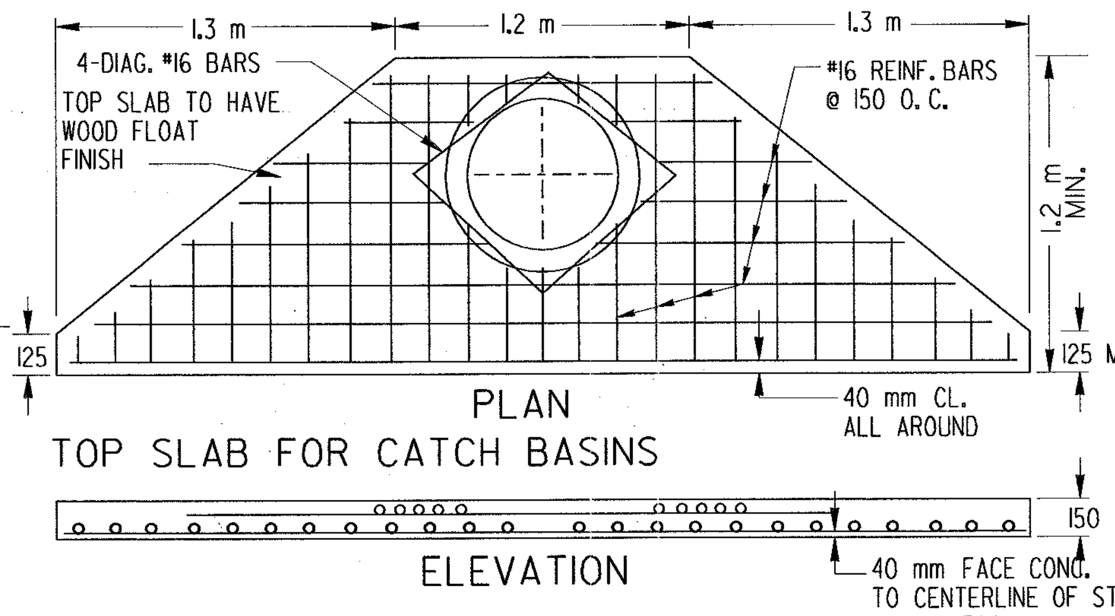

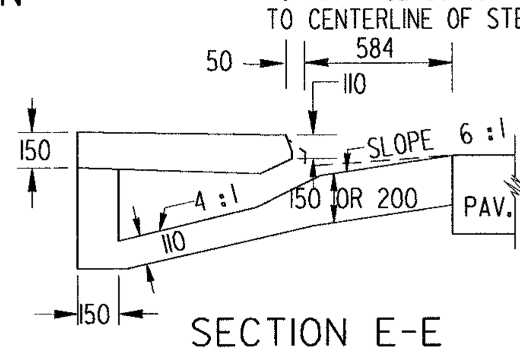

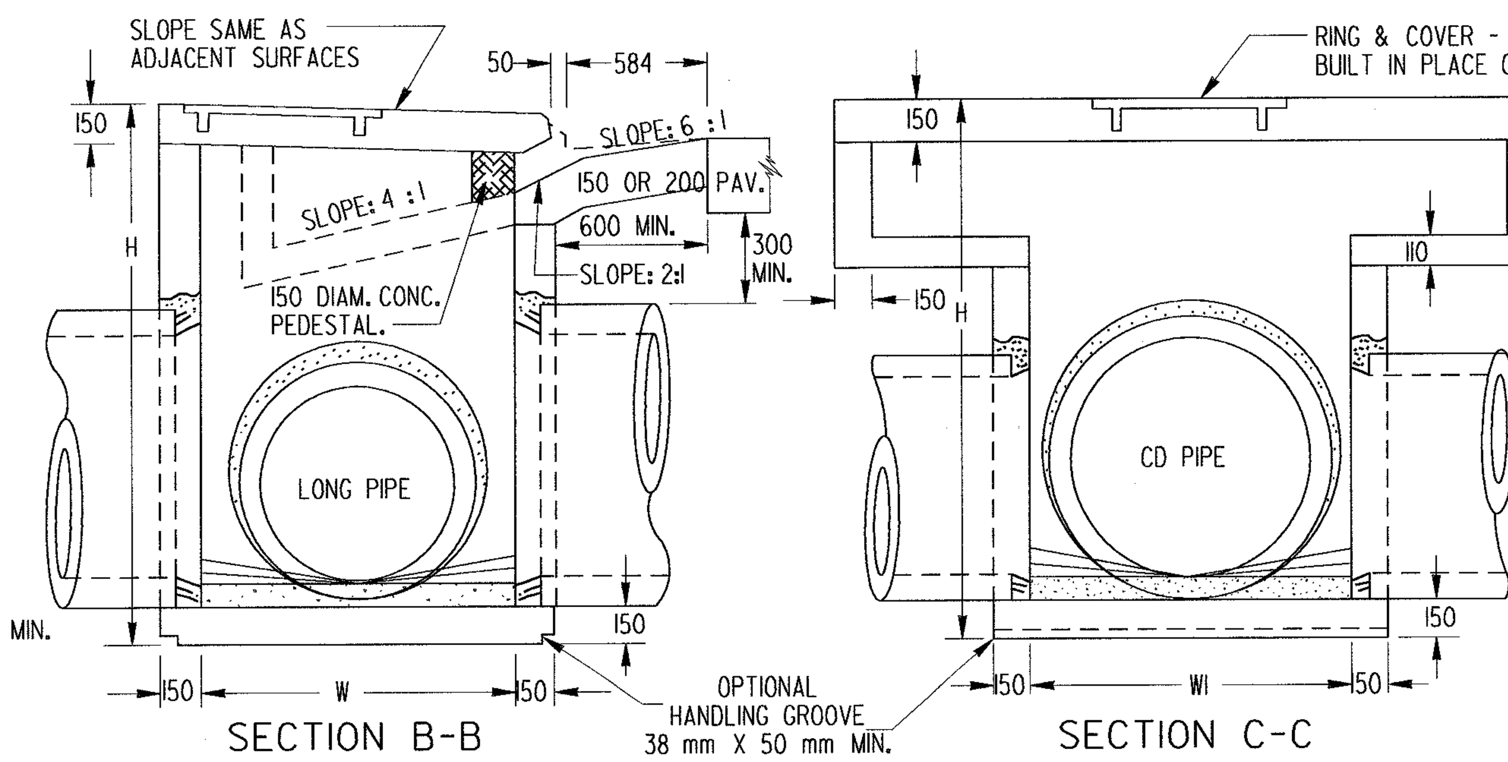

REINFORCING - ISOMETERIC VIEW

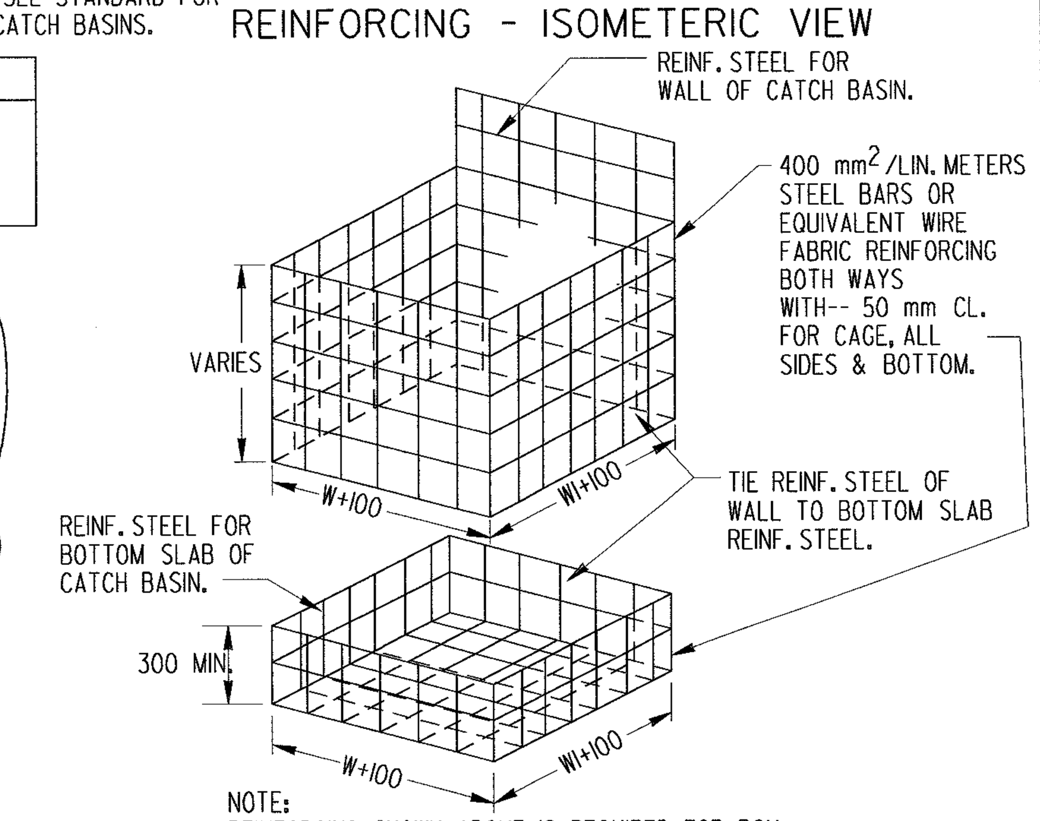

NOTE:
REINFORCING SHOWN ABOVE IS REQUIRED FOR BOX SHAPED BASIN. REINFORCING FOR CIRCULAR PRECAST ALTERNATE SHALL BE ACCORDING TO STD. 1040.

ALL JOINTS BETWEEN PRECAST RISERS OR BETWEEN PRECAST BASE AND RISER WILL BE KEYED. KEYED JOINTS SHOWN ARE TYPICAL AND MAY BE VARIED.

DETAIL AND ARRANGEMENT OF LADDER BARS

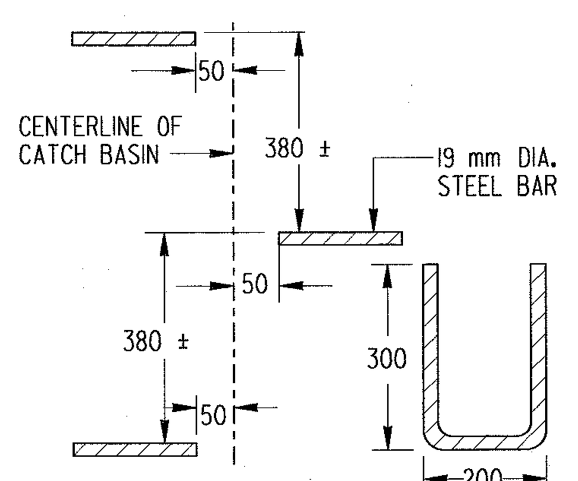

NOTE:
NUMBER AND LOCATION OF LADDER BARS IN CATCH BASIN TO BE AS DIRECTED BY THE ENGINEER.
M.H. STEPS LISTED IN GA. D.O.T. LABORATORY'S QUALIFIED PRODUCTS LIST MAY BE SUBSTITUTED.

METHOD OF CONNECTING PIPE

(WHERE CONNC. PIPE HAS TO BE CUT)

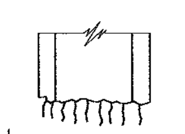

STEP 1:
CUT CONCRETE PIPE LEAVING APPROXIMATELY 75 mm OF REINFORCING MESH EXPOSED.

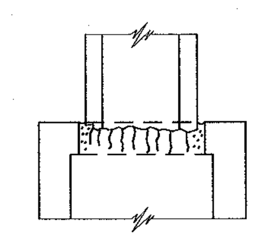

STEP 2:
POSITION PIPE APPROXIMATELY 75 mm INTO OPENING OF WALL.

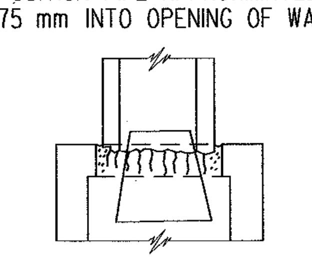

STEP 3:
POSITION CONICAL CONE INSIDE OF PIPE AND SEAL WITH GROUT (13 mm MIN. THICKNESS OF GROUT). REMOVE CORE WHEN SET AND RUB GROUT TO SEAL JOINTS.

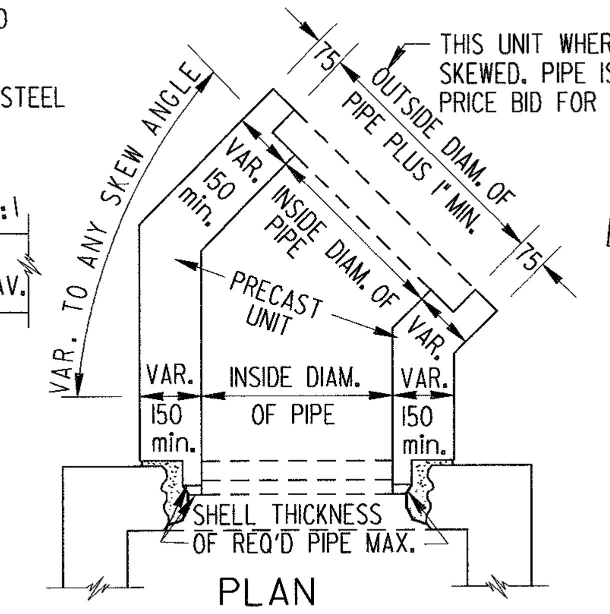

A METHOD OF CONNECTING SKEWED PIPE

IF THIS SWIVEL SECTION SLAB IS USED TO REDUCE THE W AND WI DIMENSIONS, INCREASE THE MINIMUM THICKNESS TO 220 mm AND USE REINF. STEEL. SEE DETAIL BELOW.

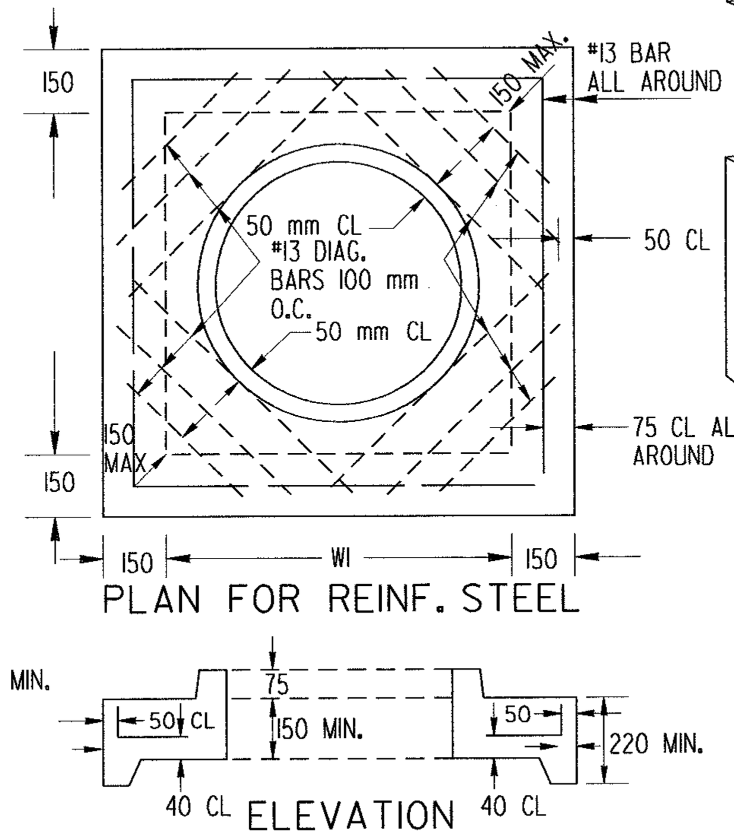

TYPICAL ISOMETERIC VIEW

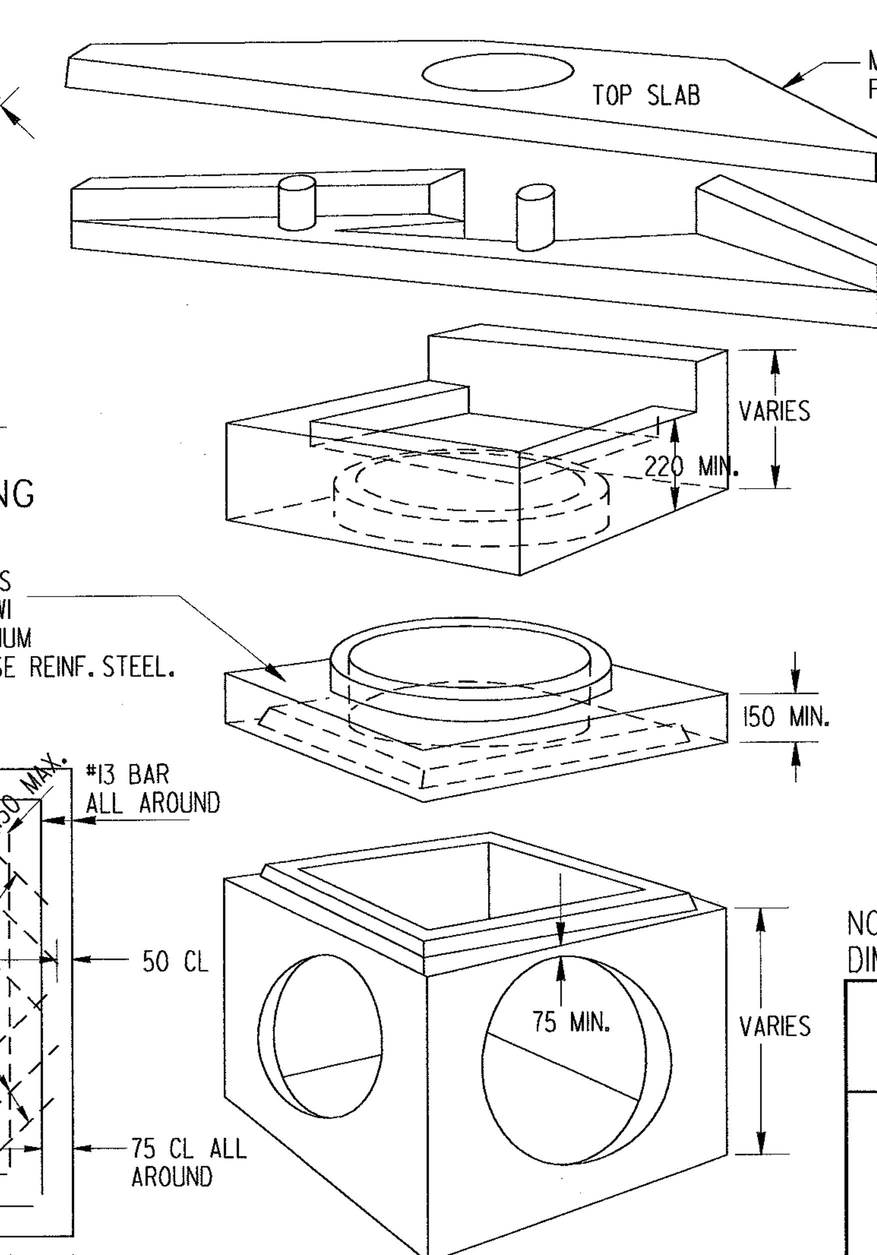

SWIVEL SECTION MAY BE USED WHERE SKEWED PIPE CONNECTS TO PRECAST CONCRETE BOX.

NOTE:
THE ABOVE VIEW DEPICTS PRECAST BOX SEE SEPARATE STANDARDS FOR CIRCULAR ALTERNATE OR BUILT-IN-PLACE BOX.

DIMENSIONS FOR CATCH BASIN		
PIPE SIZE (mm)	NORMAL W or WI (mm)	MIN. H (m)
300	900	1.32
375	900	1.40
450	900	1.48
600	900	1.68
750	1050	1.88
900	1200	2.08
1050	1500	2.24
1200	1500	2.44
1350	1800	2.60
1500	1800	2.80

NOTE:
DIMENSIONS FOR CATCH BASIN ARE BASED UPON TYPICAL OUTSIDE DIAMETERS OF CONCRETE PIPES AND MAY BE VARIED IF CONDITIONS PERMIT AND THE ENGINEER APPROVES. W & WI DIMENSIONS DO NOT HAVE TO BE EQUAL.

ALTERNATE:
BUILT-IN-PLACE PRECAST BOX, AND/OR PRECAST CIRCULAR UNITS WITH THE REQUIRED ADAPTERS, REDUCERS, FITTINGS, CONNECTIONS, ETC. MAY BE USED IN COMBINATIONS.

NOTE:
FOR RING & COVER DETAILS AND OTHER DETAILS NOT SHOWN, SEE STANDARD 1034 G FOR BUILT-IN-PLACE CATCH BASIN.

NOTE:
REBAR SIZES ARE PER ASTM A615M, SI UNITS. EQUIVALENT U.S. STANDARD SIZE AND/OR EQUAL STEEL AREAS WILL BE ALLOWED.

DETAIL OF TOP SLAB, REINF. STEEL & CLEARANCES REQ'D.

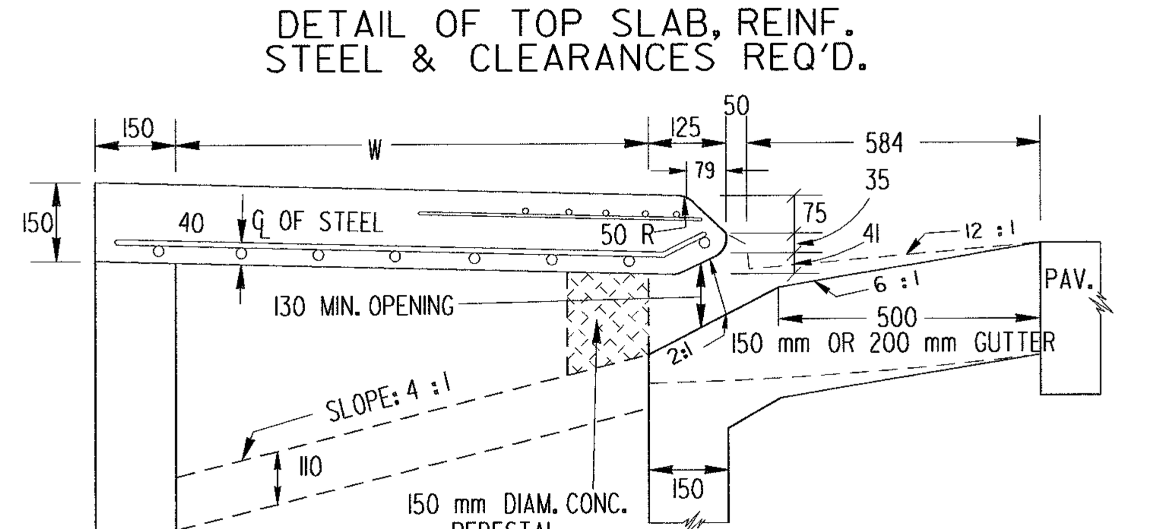

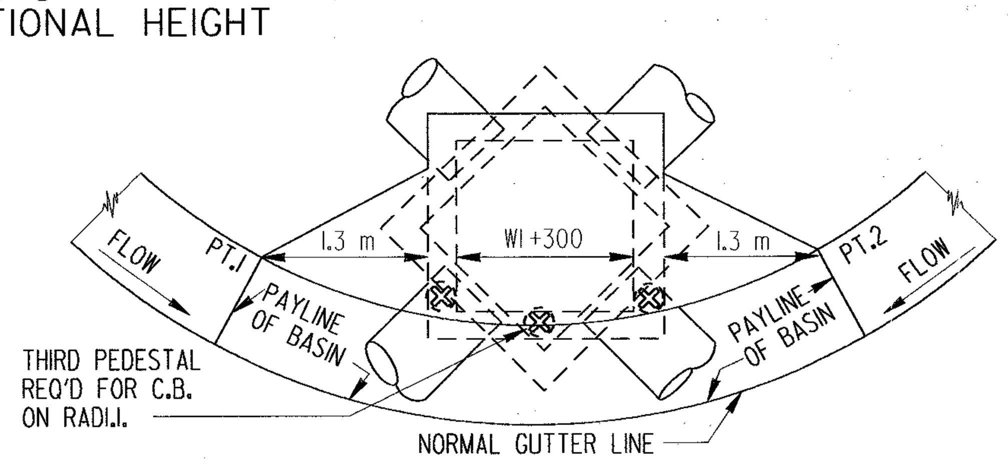

SWIVEL SECTION MAY BE USED WHERE SKEWED PIPE CONNECTS TO PRECAST CONCRETE BOX.
ALL DIMENSIONS ARE THE SAME AS SHOWN ON DETAILS FOR CATCH BASIN. DIMENSIONS FROM PT1 TO PT2 ARE MEASURED ALONG THE CHORD, UNIT PRICE BID FOR CATCH BASIN INCLUDES ALL CURB AND GUTTER FROM PT1 TO PT2.

NOTE:
DIMENSIONS ARE IN MILLIMETERS UNLESS SPECIFIED OTHERWISE.

1-21-97	REVISED METRIC REINFORCING	RMU
DATE	REVISION	BY

DEPARTMENT OF TRANSPORTATION
STATE OF GEORGIA

STANDARD
PRECAST CATCH BASINS
FOR USE WITH CURB (150mm Mountable) & GUTTER
(IN SAGS OR LOW POINTS)
(METRIC)

MAY 1996

DES. ____ DRW. ____ TRA. ____ CHK. ____

(SUBMITTED) STATE ROAD & AIRPORT DESIGN ENGR.

(APPROVED) CHIEF ENGINEER

NUMBER 1034G PRECAST