STATE	PROJECT NUMBER	SHEET NO.	TOTAL SHEETS
GA.	STP-209-1(C)	389	513

CATCH BASIN (IF CATCH BASIN HAS LONG LONGITUDINAL PIPE OVER 600, SEE DETAILS AT RIGHT)

NOTE: OPENING FOR PIPE SHALL BE THE OUTSIDE DIA. OF THE REQUIRED PIPE PLUS 25 mm MINIMUM OPENING SHALL HAVE CORRUGATIONS.

NOTE FOR ALL CATCH BASINS

12 mm EXPANSION JOINT MATERIAL SHALL BE PLACED AROUND THE CATCH BASIN WHERE SIDEWALK OR MEDIAN PAVEMENT IS PLACED ADJACENT TO THE CATCH BASIN

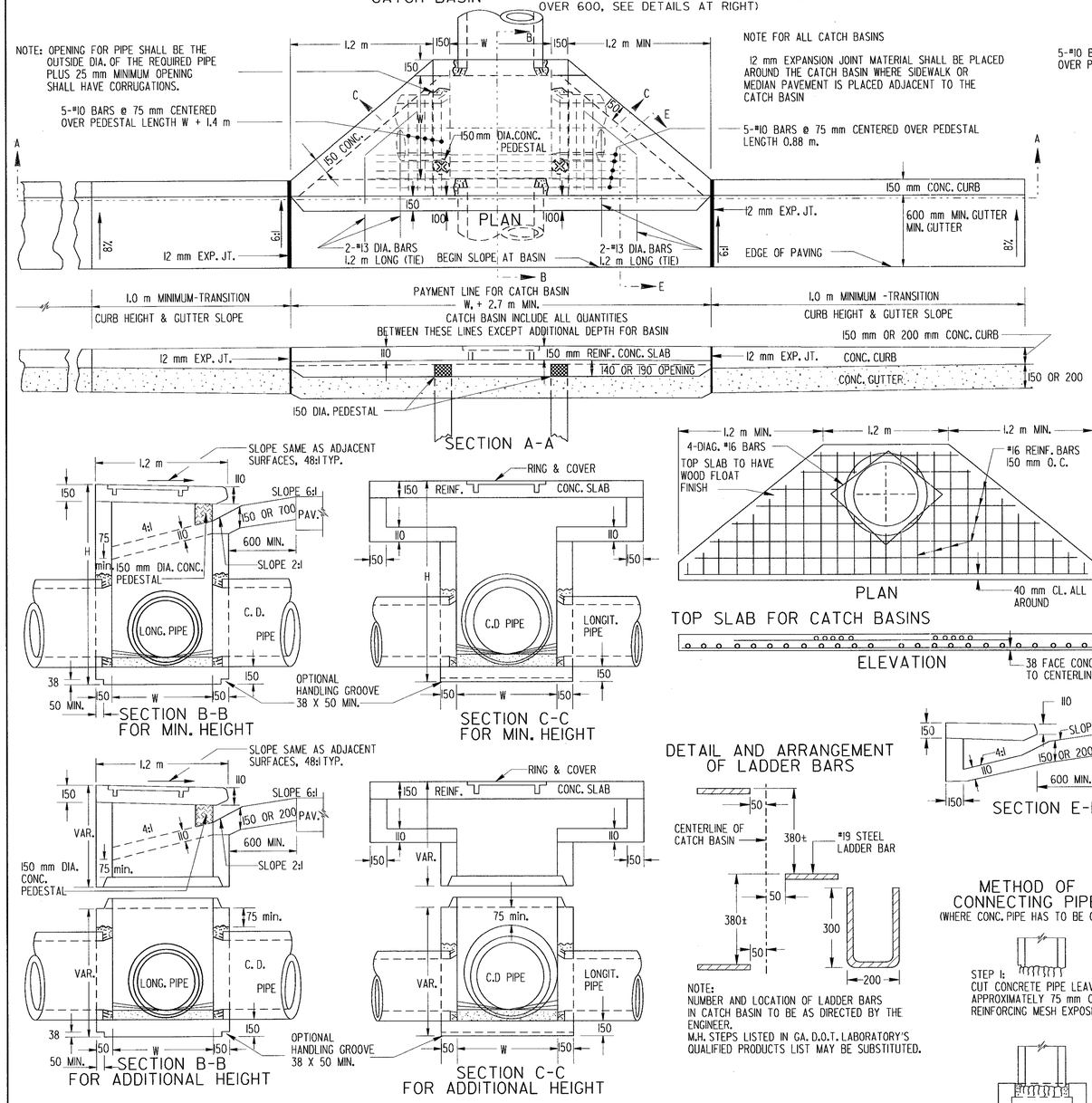

CATCH BASIN (TYPICAL FOR CATCH BASIN WITH LONGITUDINAL PIPE OVER 600.)

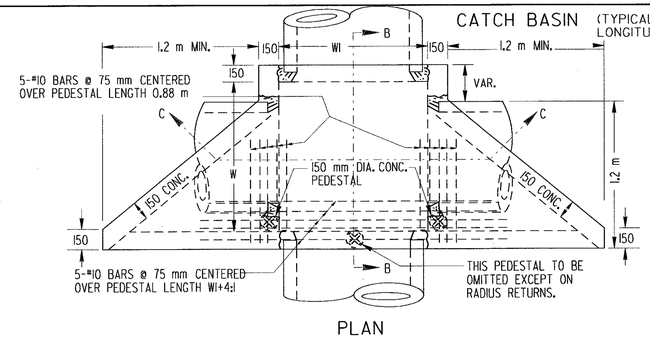

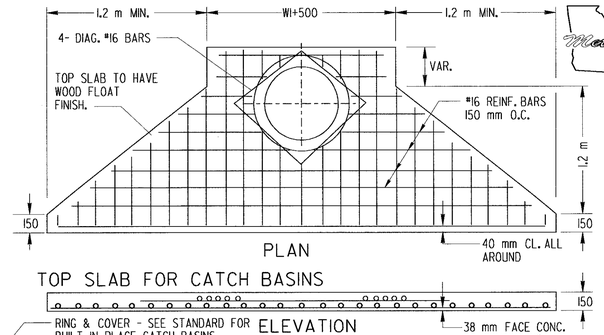

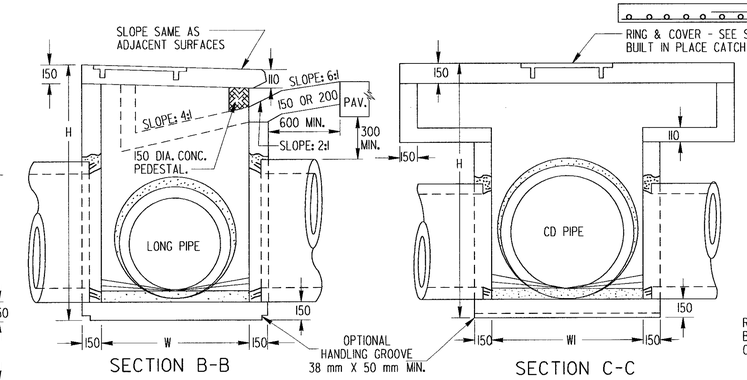

REINFORCING - ISOMETERIC VIEW

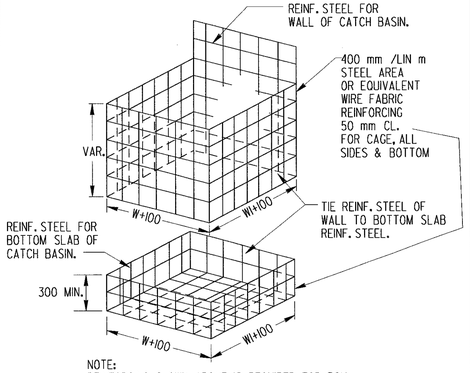

NOTE:
REINFORCING SHOWN ABOVE IS REQUIRED FOR BOX SHAPED BASIN. REINFORCING FOR CIRCULAR PRECAST ALTERNATE SHALL BE ACCORDING TO STD. 1040.

ALL JOINTS BETWEEN PRECAST RISERS OR BETWEEN PRECAST BASE AND RISER WILL BE KEYED. KEYED JOINTS SHOWN ARE TYPICAL AND MAY BE VARIED.

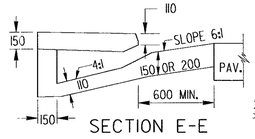

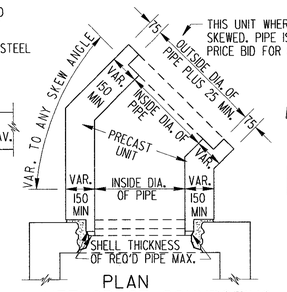

TYPICAL ISOMETERIC VIEW

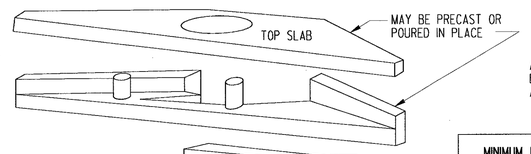

DETAIL AND ARRANGEMENT OF LADDER BARS

NOTE:
NUMBER AND LOCATION OF LADDER BARS IN CATCH BASIN TO BE AS DIRECTED BY THE ENGINEER.
M.H. STEPS LISTED IN GA. D.O.T. LABORATORY'S QUALIFIED PRODUCTS LIST MAY BE SUBSTITUTED.

METHOD OF CONNECTING PIPE

(WHERE CONC. PIPE HAS TO BE OUT)

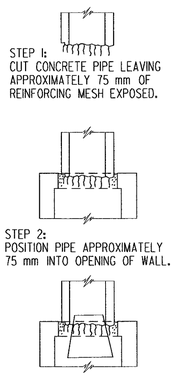

IF THIS SWIVEL SECTION SLAB IS USED TO REDUCE THE W AND W1 DIMENSIONS, INCREASE THE MINIMUM THICKNESS TO 225 mm AND USE REINF. STEEL. SEE DETAIL BELOW.

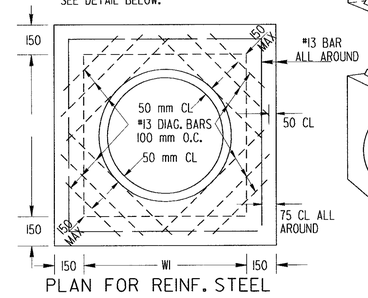

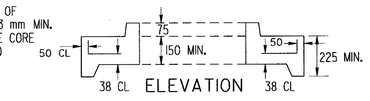

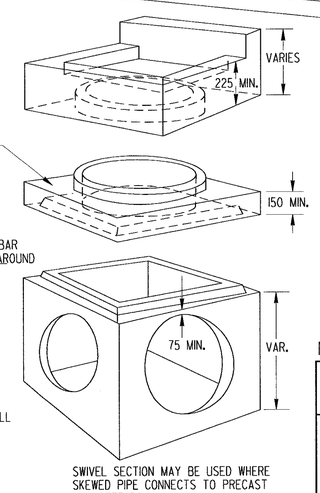

SWIVEL SECTION MAY BE USED WHERE SKEWED PIPE CONNECTS TO PRECAST CONCRETE BOX.

NOTE:
THE ABOVE VIEW DEPICTS PRECAST BOX SEE SEPARATE STANDARDS FOR CIRCULAR ALTERNATE OR BUILT-IN-PLACE BOX.

MINIMUM DIMENSIONS FOR CATCH BASIN		
PIPE I.D.	NORMAL W or W1	MIN. H
300	900	1.32
375	900	1.40
450	900	1.48
600	900	1.68
750	1100	1.88
900	1200	2.08
1050	1500	2.24
1200	1500	2.44
1350	1800	2.60
1500	1800	2.80

NOTE:
DIMENSIONS FOR CATCH BASIN ARE BASED UPON TYPICAL OUTSIDE DIAmeters OF CONCRETE PIPES AND MAY BE VARIED IF CONDITIONS PERMIT AND THE ENGINEER APPROVES. W &W1 DIMENSIONS DO NOT HAVE TO BE EQUAL.

ALTERNATE:
BUILT-IN-PLACE PRECAST BOX, AND/OR PRECAST CIRCULAR UNITS WITH THE REQUIRED ADAPTERS, REDUCERS, FITTINGS, CONNECTIONNS, ETC. MAY BE USED IN COMBINATIONS.

NOTE:
FOR RING & COVER DETAILS AND OTHER DETAILS NOT SHOWN, SEE STANDARD 1034D FOR BUILT-IN-PLACE CATCH BASIN.

NOTE:
REBAR SIZES ARE PER ASTM A615M, SI UNITS, EQUIVALENT ENGLISH STANDARD SIZE AND/OR EQUAL STEEL AREAS WILL BE ALLOWED.

NOTE: DIMENSIONS ARE IN MILLIMETERS UNLESS SPECIFIED OTHERWISE.

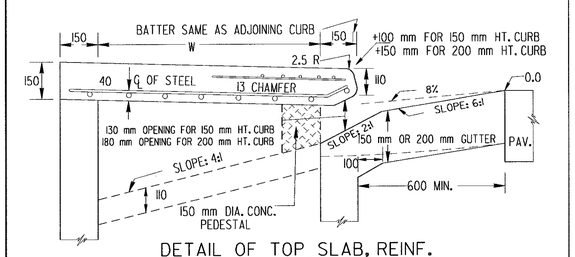

DETAIL OF TOP SLAB, REINF. STEEL & CLEARANCES REQ'D.

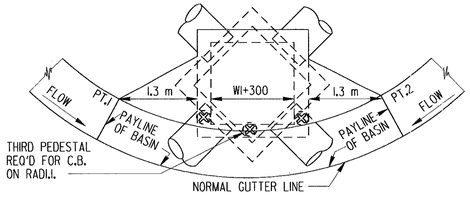

SWIVEL SECTION MAY BE USED WHERE SKEWED PIPE CONNECTS TO PRECAST CONCRETE BOX.
ALL DIMENSIONS ARE THE SAME AS SHOWN ON DETAILS FOR CATCH BASIN. DIMENSIONS FROM PT.1 TO PT.2 ARE MEASURED ALONG THE CHORD. UNIT PRICE BID FOR CATCH BASIN INCLUDES ALL CURB AND GUTTER FROM PT.1 TO PT.2.

METRIC REINFORCING	REVISION	DATE 12-13-96
RMU	BY	

DEPARTMENT OF TRANSPORTATION
STATE OF GEORGIA

STANDARD
PRECAST CATCH BASINS
FOR USE WITH CURB (150 OR 200 HT.) & GUTTER
(IN SAGS OR LOW POINTS)
(METRIC)

APRIL 1996

DES. ____ (SUBMITTED) James A. Krauss
DRW. ____ STATE ROADWAY & AIRPORT DESIGN ENGR.
TRA. ____
CHK. ____ (APPROVED) Gerald L. Ellis
CHIEF ENGINEER

NUMBER 1034D PRECAST