STATE	PROJECT NUMBER	SHEET NO.	TOTAL SHEETS
GA.	STP-209-1(1)	385	513

NOTE: OPENING FOR PIPE SHALL BE THE OUTSIDE DIAMETER OF THE REQUIRED PIPE PLUS 25 mm MIN OPENING SHALL HAVE CORRUGATIONS.

CATCH BASIN (IF CATCH BASIN HAS LONGITUDINAL PIPE OVER 600 mm, SEE DETAILS AT RIGHT.)

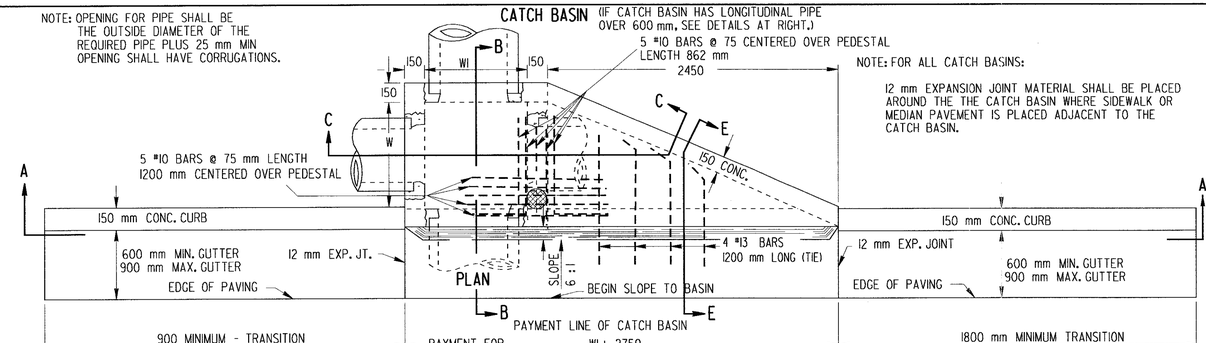

NOTE: FOR ALL CATCH BASINS:

12 mm EXPANSION JOINT MATERIAL SHALL BE PLACED AROUND THE THE CATCH BASIN WHERE SIDEWALK OR MEDIAN PAVEMENT IS PLACED ADJACENT TO THE CATCH BASIN.

CATCH BASIN (TYPICAL FOR CATCH BASIN WITH LONGITUDINAL PIPE OVER 600.)

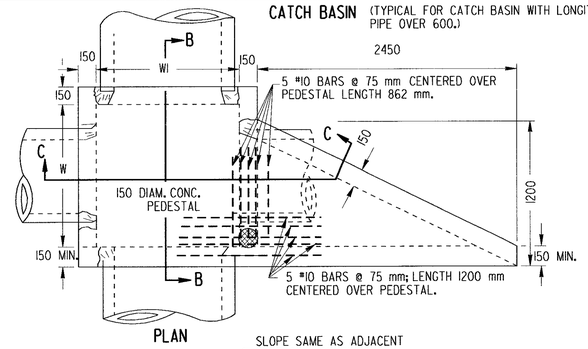

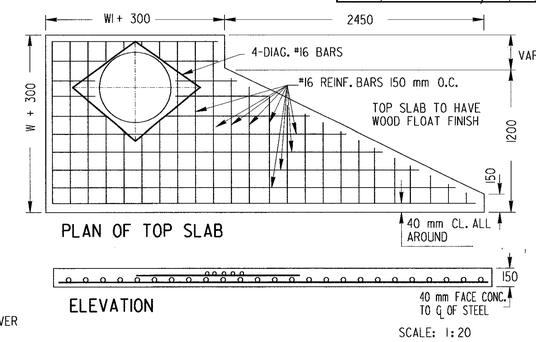

SCALE: 1:20

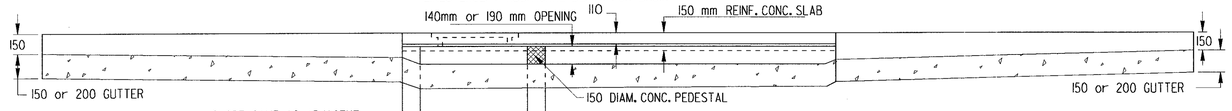

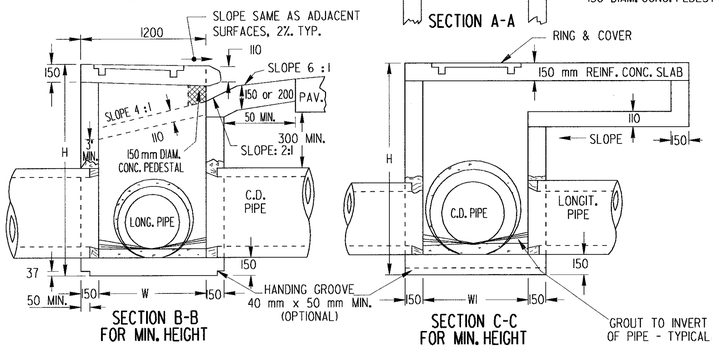

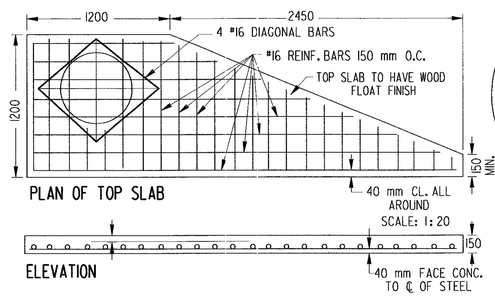

SCALE: 1:20

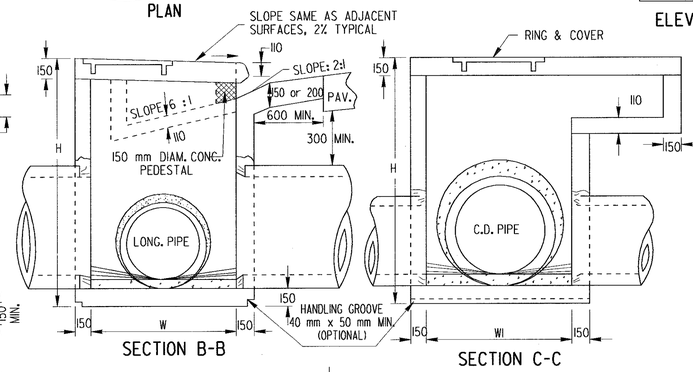

REINFORCING - ISOMETRIC VIEW

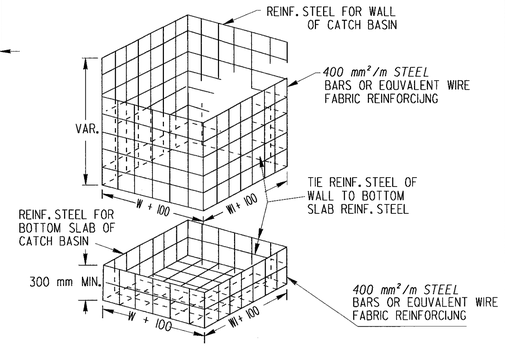

NOTE:
REINFORCING SHOWN ABOVE IS REQUIRED FOR BOX SHAPED BASIN. REINFORCING FOR CIRCULAR PRECAST ALTERNATE SHALL BE ACCORDING TO STD. 1040.

ALL JOINTS BETWEEN PRECAST RISERS OR BETWEEN PRECAST BASE AND RISER WILL BE KEYED. KEYED JOINTS SHOWN ARE TYPICAL AND MAY BE VARIED.

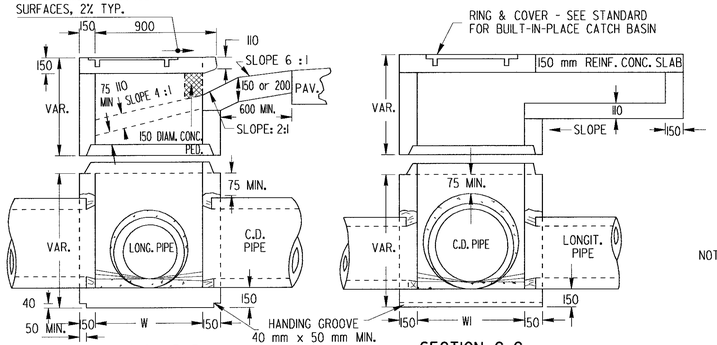

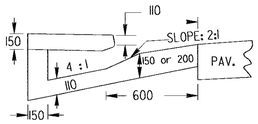

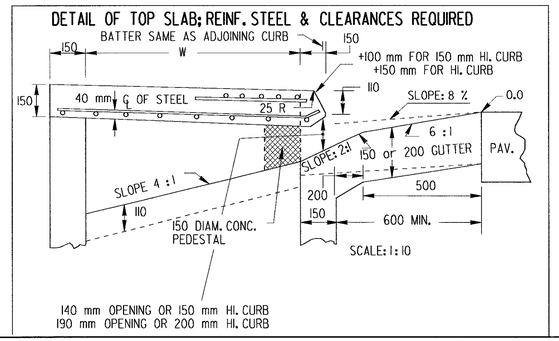

DETAIL AND ARRANGEMENT OF LADDER BARS

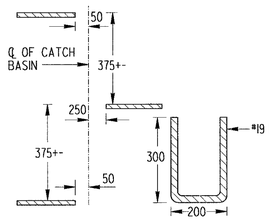

NOTE:
NUMBER AND LOCATION OF LADDER BARS IN CATCH BASIN TO BE AS DIRECTED BY THE ENGINEER

M.H. STEPS LISTED IN GA. D.O.T. LABORATORY'S QUALIFIED PRODUCTS LIST MAY BE SUBSTITUTED.

METHOD OF CONNECTING PIPE (WHERE CONCRETE PIPE HAS TO BE CUT)

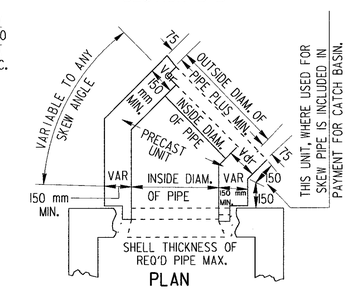

A METHOD OF CONNECTING SKEWED PIPE

IF THIS SWIVEL SECTION SLAB IS USED TO REDUCE THE W AND WI DIMENSIONS, INCREASE THE MIN. THICKNESS TO 225 mm AND USE REINF. STEEL. SEE DETAIL BELOW.

DETAIL FOR REINFORCED STEEL

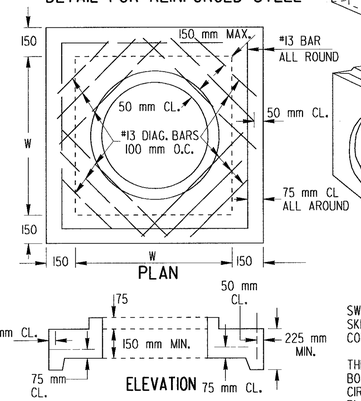

SWIVEL SECTION MAY BE USED WHERE SKEWED PIPE CONNECTS TO PRECAST CONCRETE BOX.

THE ABOVE VIEW DEPICTS PRECAST BOX. SEE SEPARATE STANDARDS FOR CIRCULAR ALTERNATE OR BUILT-IN-PLACE BOX.

TYPICAL ISOMETRIC VIEW

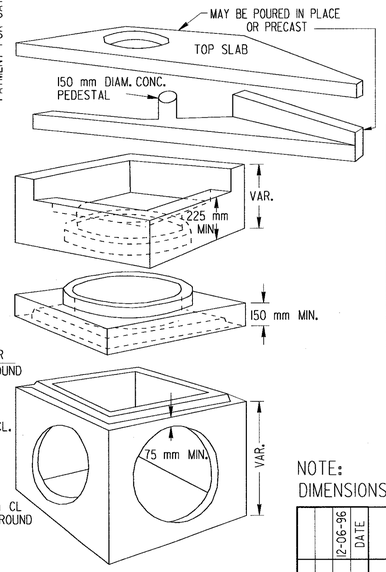

DIMENSIONS FOR CATCH BASINS		
PIPE SIZE (mm)	NORMAL W OR W_1 (mm)	MIN H (m)
300	900	1.30
375	900	1.38
450	900	1.45
600	900	1.65
750	1050	1.85
900	1200	2.05
1050	1500	2.15
1200	1500	2.40
1350	1800	2.55
1800	1800	2.75

NOTE:
DIMENSIONS FOR CATCH BASINS ARE BASED UPON TYPICAL OUTSIDE DIAMETERS OF CONCRETE PIPES AND MAY BE VARIED IF CONDITIONS PERMIT AND THE ENGINEER APPROVES. W & WI DIMENSIONS DO NOT HAVE TO BE EQUAL.

ALTERNATE:
BUILT-IN-PLACE, PRECAST BOX, AND/OR PRECAST CIRCULAR UNITS WITH THE REQUIRED ADAPTERS, REDUCERS, FITTINGS, CONNECTORS, ETC. MAY BE USED IN COMBINATIONS.

NOTE:
FOR RING & COVER DETAILS AND OTHER DETAILS NOT SHOWN, SEE STANDARD 1033 D FOR BUILT-IN-PLACE CATCH BASIN.

NOTE:
REBAR SIZES ARE PER ASTM A615 M, SI UNITS. EQUIVALENT U.S. STANDARD SIZE AND/OR EQUAL STEEL AREAS WILL BE ALLOWED.

NOTE:
DIMENSIONS ARE IN MILLIMETERS UNLESS SPECIFIED OTHERWISE.

12-06-96	DATE	DEPARTMENT OF TRANSPORTATION STATE OF GEORGIA
METRIC REINFORCING	REVISION	STANDARD PRECAST CATCH BASINS FOR USE WITH CURB (150 mm OR 200 mm HT.) & GUTTER (METRIC) MAY 1996
RMU	BY	DES. ____ (SUBMITTED) STATE ROAD & AIRPORT DESIGN ENGR. DRW. ____ TRA. ____ (APPROVED) CHIEF ENGINEER CHK. ____

NUMBER 1033D PRECAST

4/12/2006 5:02:47 PM \\GDOT-DSN\GOPLOT\OCF\go_kip8000_paper_36x24.ocf mgavins h:\RoadDesign\StandardsandConstructionDetails\Standards\Metric Standards (.PRF)\m1033dp.prf GO-RD4