STATE	PROJECT NUMBER	SHEET NO.	TOTAL SHEETS
GA.	STP-209-1(1)	384	513

CATCH BASIN

(IF CATCH BASIN HAS LONGITUDINAL PIPE OVER 600 mm, SEE DETAILS AT RIGHT)

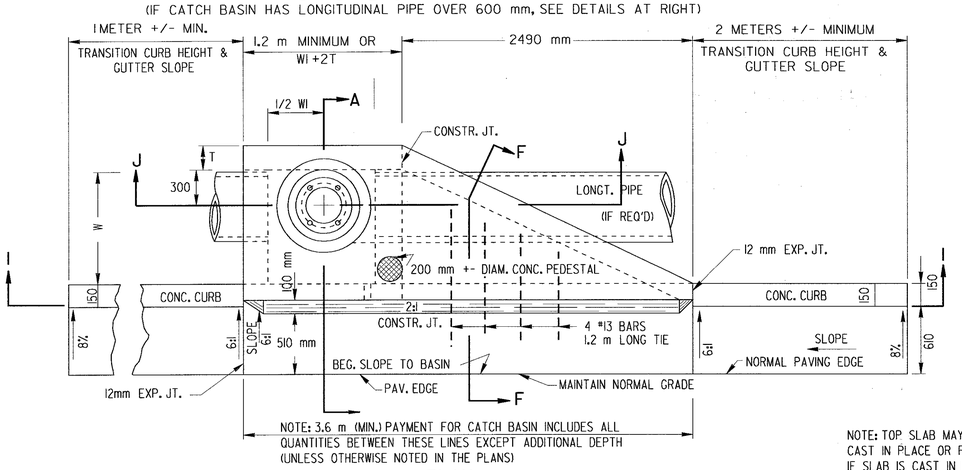

PLAN

NOTE: TOP SLAB MAY BE CAST IN PLACE OR PRECAST. IF SLAB IS CAST IN PLACE, BUILDERS PAPER IS TO BE PLACED BETWEEN THE CATCH BASIN AND TOP SLAB.

DETAIL OF TOP SLAB, REINF. STEEL & CLEARANCES REQ'D.

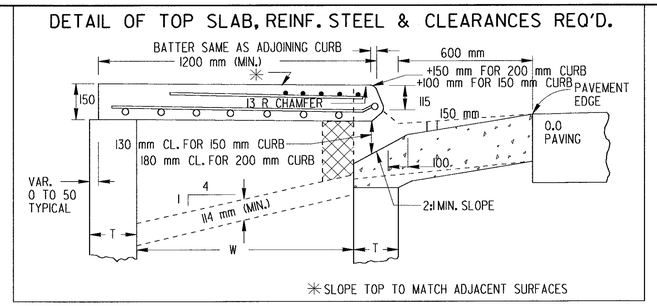

(TYPICAL FOR CATCH BASIN WITH LARGE LONGITUDINAL PIPE OR RECESSED BOX)

CATCH BASIN - (WITH PROTRUDED BACK)

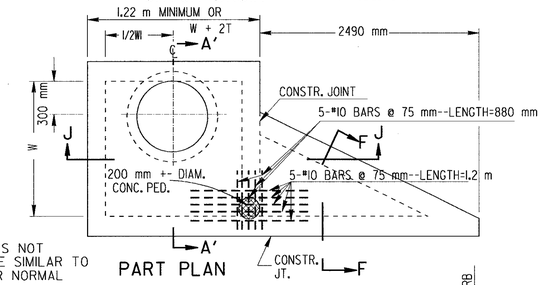

PART PLAN

NOTE: CATCH BASIN DETAILS NOT SHOWN HERE WILL BE SIMILAR TO THOSE AT LEFT FOR NORMAL CATCH BASIN.

CASTING DETAILS

3° TO 7 ° DRAFTS TYPICAL

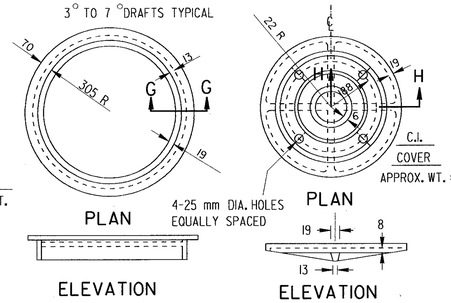

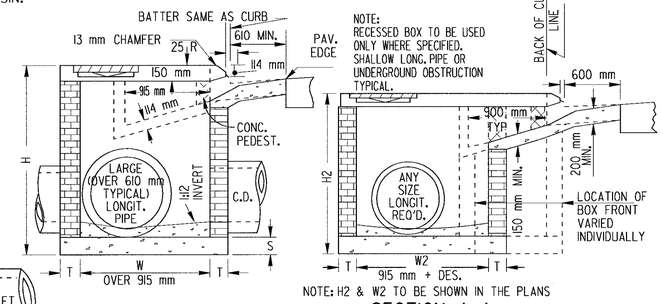

SECTION A'-A' (WITH LARGE LONGITUDINAL PIPE)

SECTION A-A (WITH RECESSED BOX)

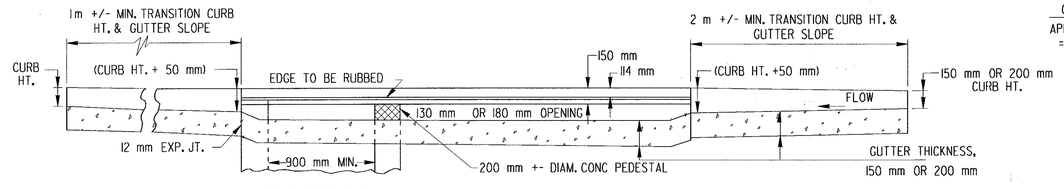

SECTION I-I

NOTE: NORMAL SLOPE OF CONCRETE APRON TO BE INCREASED BY 100 mm OR 200 mm WHERE 'H' PERMITS AND LONGITUDINAL PIPE IS LOWERED FOR OTHER REASONS.

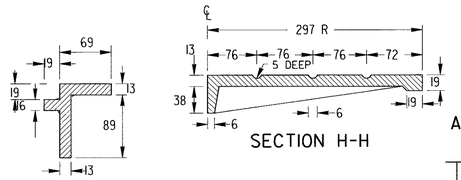

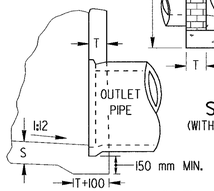

ALTERNATE TO INVERT

DETAIL OF TOP REINFORCED CONCRETE SLAB

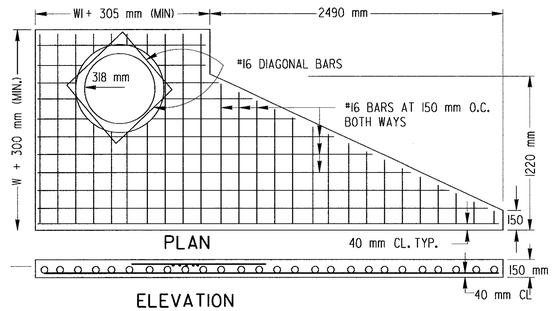

NOTE: PIPE SIZES, NUMBER, ALIGNMENT, AND INVERT SHOWN ARE ILLUSTRATIVE. SEE PLANS FOR SPECIFICS. INVERTS TO BE FORMED WITH GROUT OR CONCRETE AS DIRECTED BY THE ENGINEER OR AS SHOWN IN THE PLANS.

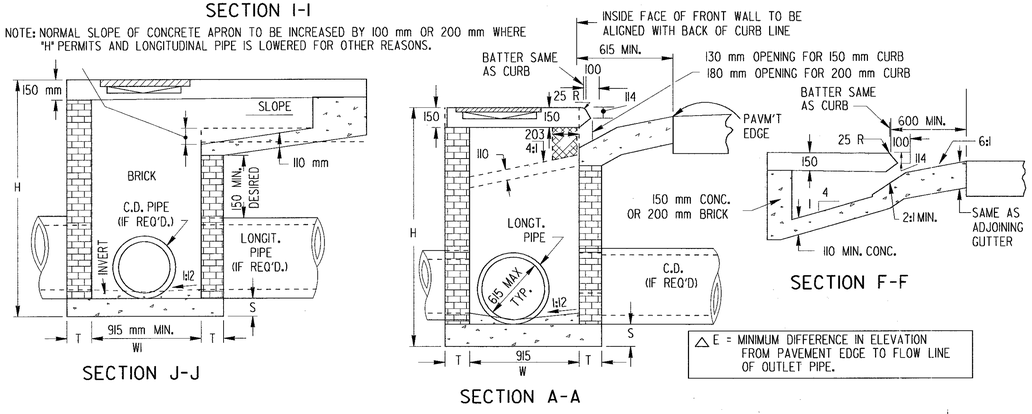

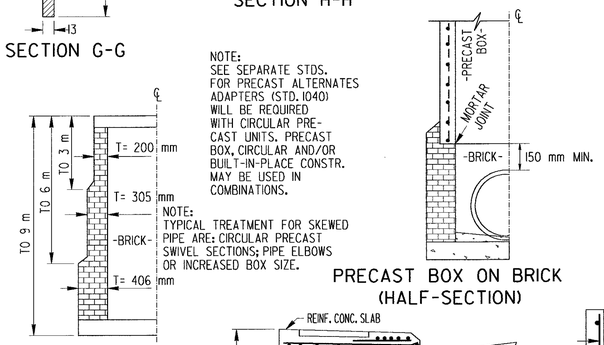

NOTE: SEE SEPARATE STDS. FOR PRECAST ALTERNATES ADAPTERS (STD. 1040) WILL BE REQUIRED WITH CIRCULAR PRE-CAST UNITS. PRECAST BOX, CIRCULAR AND/OR BUILT-IN-PLACE CONSTR. MAY BE USED IN COMBINATIONS.

NOTE: TYPICAL TREATMENT FOR SKEWED PIPE ARE: CIRCULAR PRECAST SWIVEL SECTIONS; PIPE ELBOWS OR INCREASED BOX SIZE.

NOTE: REBAR SIZES ARE PER ASTM A615 m, SI UNITS. EQUIVALENT U.S. STANDARD SIZE AND/OR EQUAL STEEL AREAS WILL BE ALLOWED.

NOTE: DIMENSIONS ARE IN MILLIMETERS UNLESS SPECIFIED OTHERWISE.

DETAIL OF TOP REINFORCED CONCRETE SLAB

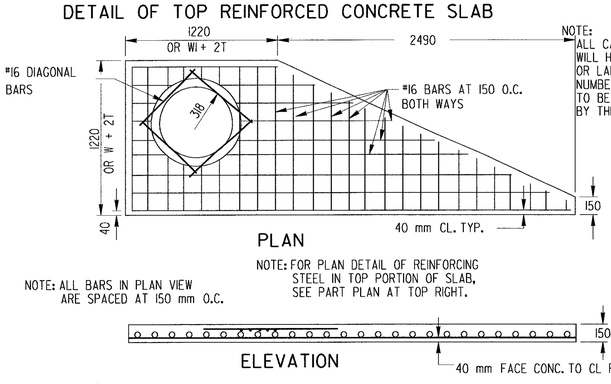

NOTE: ALL CATCH BASINS WILL HAVE STEPS OR LADDER BARS, NUMBER & LOCATION TO BE AS DIRECTED BY THE ENGINEER

NOTE: ALL BARS IN PLAN VIEW ARE SPACED AT 150 mm O.C.

NOTE: FOR PLAN DETAIL OF REINFORCING STEEL IN TOP PORTION OF SLAB, SEE PART PLAN AT TOP RIGHT.

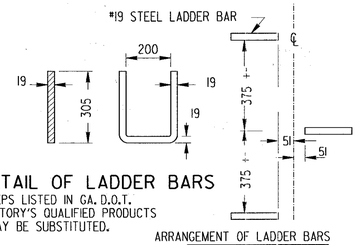

DETAIL OF LADDER BARS

NOTE: M.H. STEPS LISTED IN GA. D.O.T. LABORATORY'S QUALIFIED PRODUCTS LIST MAY BE SUBSTITUTED.

ARRANGEMENT OF LADDER BARS

W OR W1 (MAX.)	BOTTOM SLAB	
	MATERIALS	S
TO 1370	NON-REINF. CONCRETE	150
	OR BRICK	200
OVER 1370	CONC. REINF. W1 15M BARS 300 O.C. BOTH WAYS 50 CL. FROM SLAB TOP	200

TYPICAL MIN. DIMENSIONS

PIPE (mm)	H (m)	W or W1 (m)	△E (m)
300	1.32	0.91	0.98
375	1.39	0.91	1.06
450	1.50	0.91	1.15
600	1.65	0.91	1.32
760	1.85	1.18	1.52
900	2.08	1.40	1.70
1050	2.23	1.60	1.80
1200	2.43	1.83	1.98
1350	2.59	2.04	2.13
1500	2.79	2.23	2.30

NOTE: THE MIN. H & MIN. E GIVEN IN ABOVE TABLE ARE BASED UPON TYPICAL OUTSIDE DIAMETERS OF CONC. PIPE AND MAY BE VARIED IF CONDITIONS PERMIT WITH VARIED DIMENSIONS SPECIFIED IN THE PLANS OR DIRECTED BY THE ENGINEER. W. & W. DIMENSIONS DO NOT HAVE TO BE EQUAL.

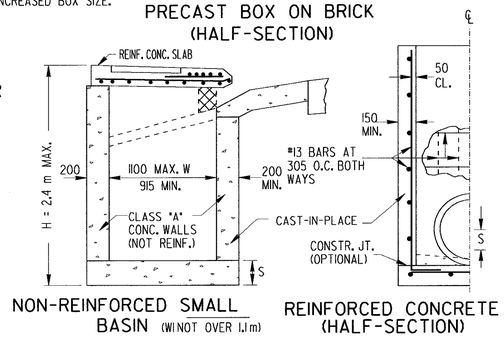

CONSTRUCTION ALTERNATES

NOTE: DETAILS NOT SHOWN ABOVE FOR CONSTRUCTION ALTERNATES WILL BE SIMILAR TO BRICK CATCH BASIN SEE SEPARATE STANDARDS FOR PRECAST ALTERNATES.

METRIC REFORCING	REVISION	12-06-96	DATE
RMU	BY		

DEPARTMENT OF TRANSPORTATION
STATE OF GEORGIA

STANDARD CATCH BASINS FOR USE WITH CURB (150 mm HT. OR 200 mm HT.) & GUTTER (METRIC)

MAY 1996

DES. ____ DRW. ____ TRA. ____ CHK. ____

(SUBMITTED) STATE ROAD & AIRPORT DESIGN ENGR.

(APPROVED) CHIEF ENGINEER

NUMBER 1033D