STATE	PROJECT NUMBER	SHEET NO.	TOTAL SHEETS
GA.	STP-209-1(1)	383	513

CATCH BASIN TYPE 1

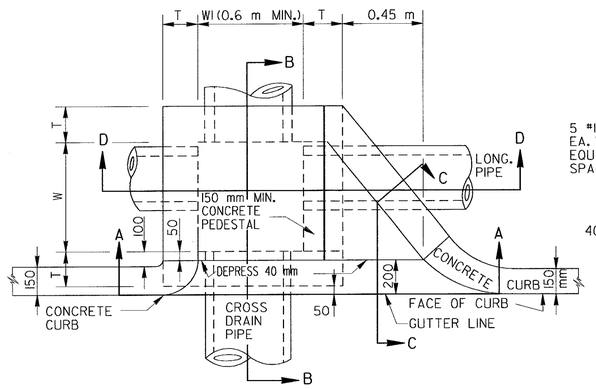

PLAN

PRECAST CONCRETE SLAB

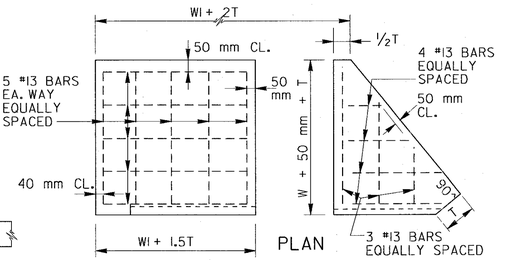

PLAN

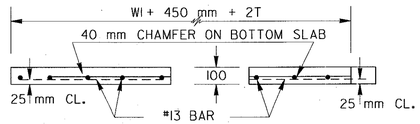

ELEVATION

NOTE:
TOP SLAB TO BE CONSTRUCTED IN TWO SECTIONS AS SHOWN.

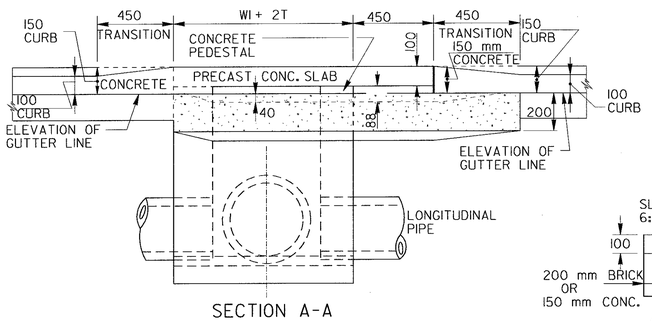

SECTION A-A

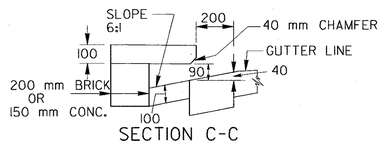

SECTION C-C

NOTE:
IF CATCH BASIN IS USED IN 1.2 m MEDIAN WITH 100 mm CURB HEIGHT, SLOPE TOP SLAB 50 mm BACK. BACK TOP OF SLAB TO HAVE SAME ELEVATION AS TOP OF CURB.

T= 200 mm FOR BRICK MASONRY WALLS OR BOTTOM
T= 150 mm CONCRETE WALLS OR BOTTOM

MIN. DIMENSIONS-TP. 1 OR 2		
PIPE SIZE	W OR WI	MIN. H
250 mm	600 mm	900 mm
375 mm	600 mm	975 mm
450 mm	675 mm	1125 mm

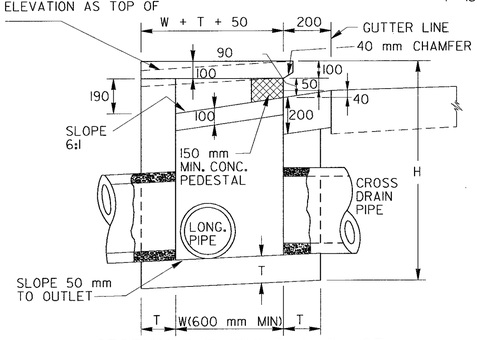

SECTION B-B (BUILT IN PLACE)
SAME FOR TYPE 2

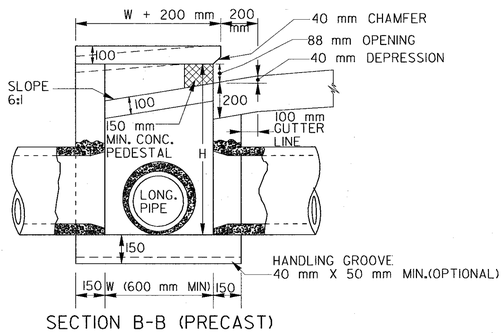

SECTION B-B (PRECAST)
SAME FOR TYPE 2

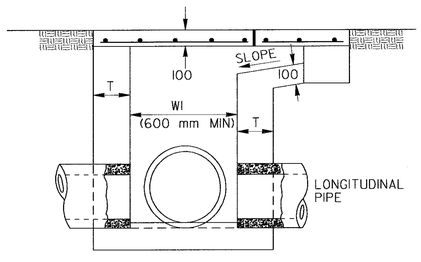

SECTION D-D

CATCH BASIN TYPE 2

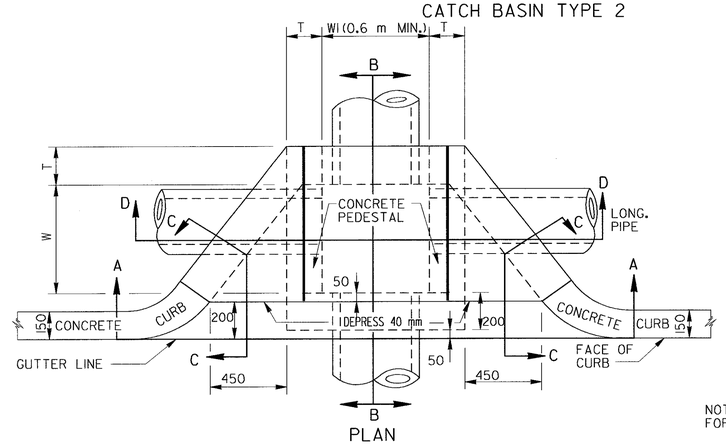

PLAN

T= 200 mm FOR BRICK MASONRY WALLS OR BOTTOM
T= 150 mm CONCRETE WALLS OR BOTTOM

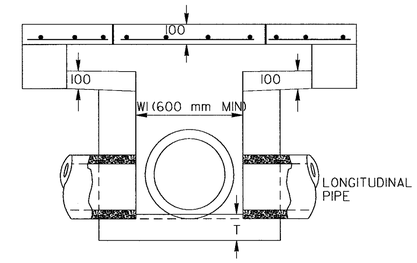

SECTION D-D

NOTE:
FOR SECTION B-B AND SECTION C-C SEE CATCH BASIN TYPE 1.

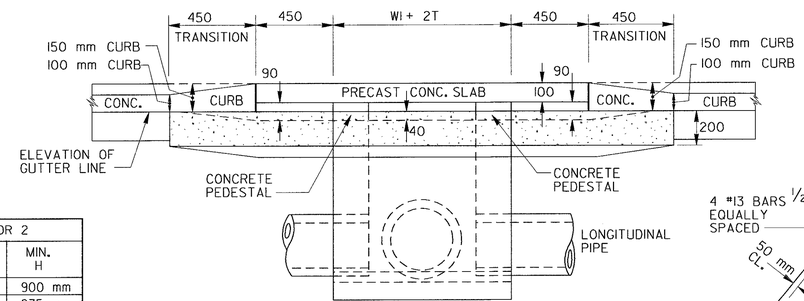

SECTION A-A

PRECAST CONCRETE SLAB

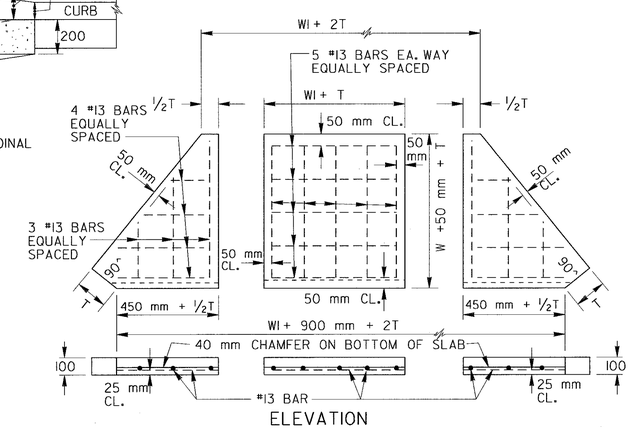

ELEVATION

NOTE: TOP SLAB TO BE CONSTRUCTED IN THREE SECTIONS SHOWN.

MODIFICATION FOR CATCH BASIN TYPE 2.
FOR USE ON SHORT RADIUS CURVES

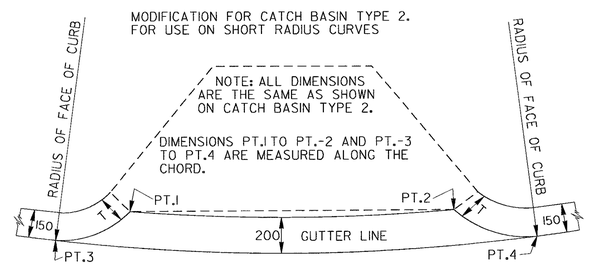

NOTE:
REBAR SIZES ARE PER ASTM A615 M, SI UNITS. EQUIVALENT U.S. STANDARD SIZE AND/OR EQUAL STEEL AREAS WILL BE ALLOWED.

SPECIAL NOTE:
THIS STANDARD IS FOR USE ONLY WHERE IT IS NOT FEASIBLE TO USE OTHER CATCH BASIN OR DROP INLET DESIGNS.

NOTE :
DIMENSIONS ARE IN MILLIMETERS UNLESS SPECIFIED OTHERWISE.

GENERAL NOTES:

1. SPECIFICATIONS: GEORGIA STANDARD, CURRENT EDITION & SUPPLEMENTS THERETO.

2. CATCH BASIN WALLS AND BOTTOM SHALL BE EITHER 200 mm BRICK MASONRY OR 150 mm CLASS A CONCRETE OR A COMBINATION OF BOTH. IF BOX PORTION OF CATCH BASIN IS PRECAST, ALL WALLS AND BOTTOM SHALL BE REINFORCED WITH #13 BARS AT 300 mm O.C. EACH WAY OR EQUIVALENT WITH FABRIC REINFORCEMENT, WITH 50 mm MIN. COVER OVER ALL STEEL. CAST-IN-PLACE CONCRETE WALLS AND BOTTOMS DO NOT REQUIRE REINFORCEMENT. ALTERNATE: BOTTOM PORTION OF STRUCTURE MAY BE CIRCULAR WITH ADAPTER TYPE 3 BETWEEN CIRCULAR AND SQUARE SECTIONS. (SEE STANDARD 1040.)

2-17-97	DATE	DEPARTMENT OF TRANSPORTATION STATE OF GEORGIA
REVISED METRIC REINFORCING	REVISION	STANDARD PRECAST OR BUILT IN PLACE CATCH BASINS MAXIMUM PIPE CONNECTION-450mm MAY BE USED IN 1.2 M MEDIAN (METRIC) APRIL 1996
RWJ	BY	DES. ____ (SUBMITTED) STATE ROAD & AIRPORT DESIGN ENGR. DRW. ____ TRA. ____ (APPROVED) CHIEF ENGINEER CHK. ____
		NUMBER 1033B