STATE	PROJECT NUMBER	SHEET NO.	TOTAL SHEETS
GA.	STP-209-1(1)	380	513

NOTE:

SEE STANDARD 1019-A- BRICK DROP INLETS- FOR DETAIL OF GRATING FRAME,HOOD,ETC., WHERE NEEDED.

TYPE "A"

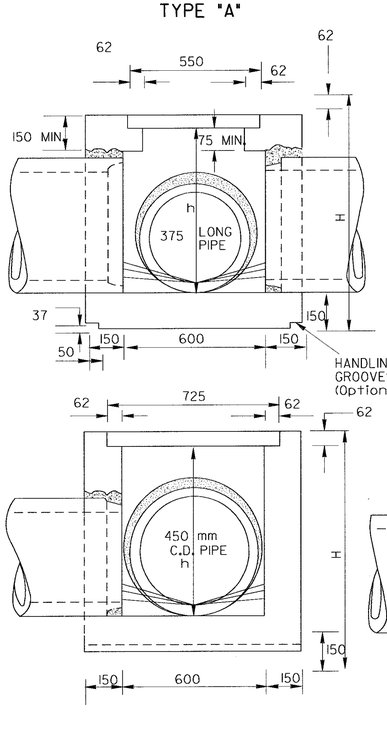

TYPE "B" WITH WEIR

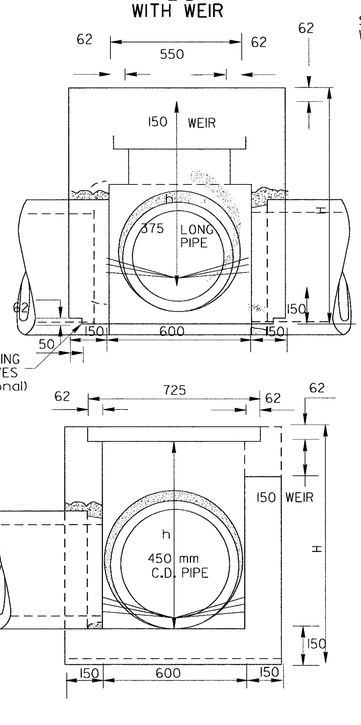

TYPE "C" (WITH OR WITHOUT WEIR)

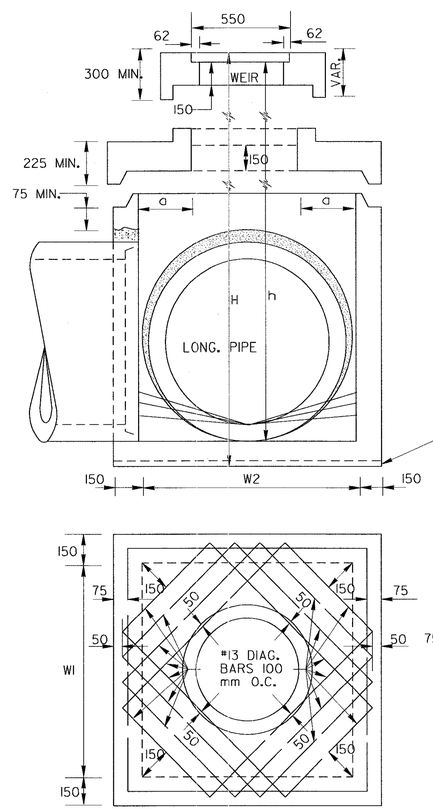

FOR OTHER DETAILS, SEE TYPE "B"

TYPE "E"

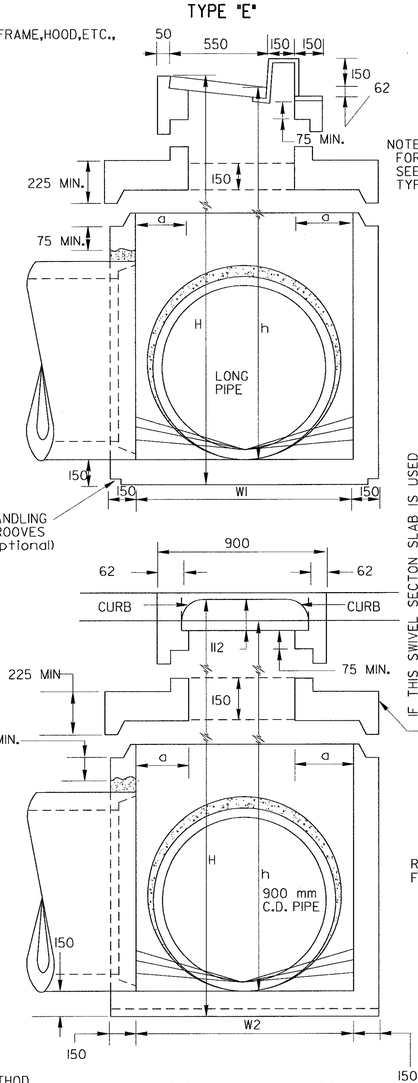

IF THIS SWIVEL SECTON SLAB IS USED TO REDUCE THE W OR W DIMENSIONS, INCREASE THE MIN. THICKNESS TO 225 mm AND USE REINF. STEEL SHOWN UNDER TYPE "C"

ISOMETRIC VIEW OF DROP INLET TYPE "C" OR "E" FOR PIPES LARGER THAN 450 mm WITH OR WITHOUT WEIR)

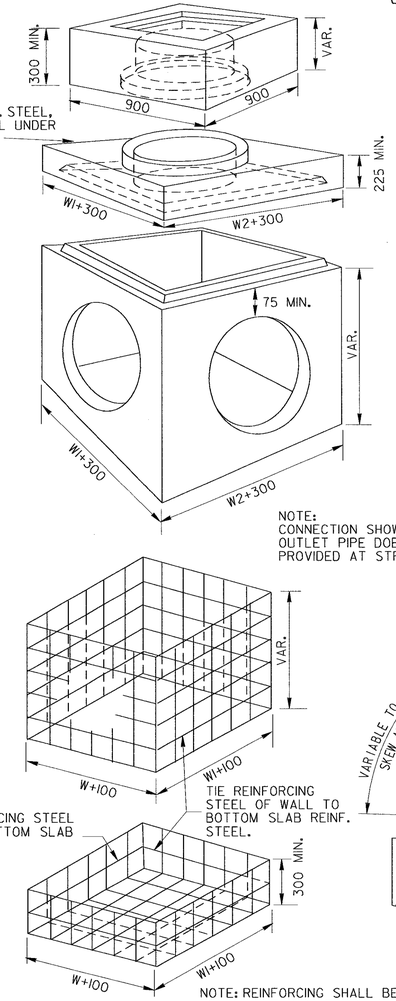

NOTE:
FOR REINF. STEEL, SEE DETAIL UNDER TYPE "C"

NOTE:
CONNECTION SHOWN ABOVE FOR USE WHERE CONCRETE OUTLET PIPE DOES NOT HAVE BELL OR HUB END PROVIDED AT STRUCTURE OUTLET.

NOTE: REINFORCING SHALL BE 400 mm2/m BARS OR EQUIVALENT WIRE FABRIC REINFORCING, ROLLED TO THE DIMENSIONS AS SHOWN ABOVE OR TO ALLOW A MINIMUM OF 50 mm CLEARANCE REINFORCING RODS OF #13 DIAMETER PLACED ON 300 mm CENTERS BOTH VERTICAL AND HORIZONTAL MAY BE USED AS AN ALTERNATE TO THE ABOVE.

METHOD OF CONNECTING PIPE

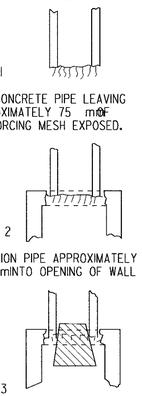

STEP 1

CUT CONCRETE PIPE LEAVING APPROXIMATELY 75 mm OF REINFORCING MESH EXPOSED.

STEP 2

POSITION PIPE APPROXIMATELY 75 mm INTO OPENING OF WALL

STEP 3

POSITION CONICAL CORE INSIDE OF PIPE AND SEAL WITH GROUT (12 mm MIN. THICKNESS OF GROUT). REMOVE CORE WHEN SET AND RUB GROUT TO SEAL JOINTS.

METHOD OF CONNECTION SKEWED PIPE

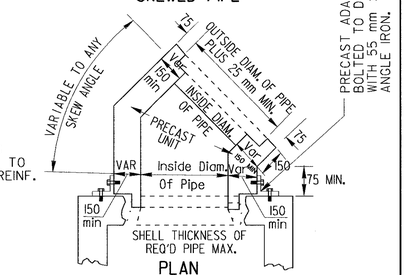

PLAN

THE PRECAST ADAPTOR, WHERE USED, IS TO BE FURNISHED AND INSTALLED BY THE CONTRACTOR.

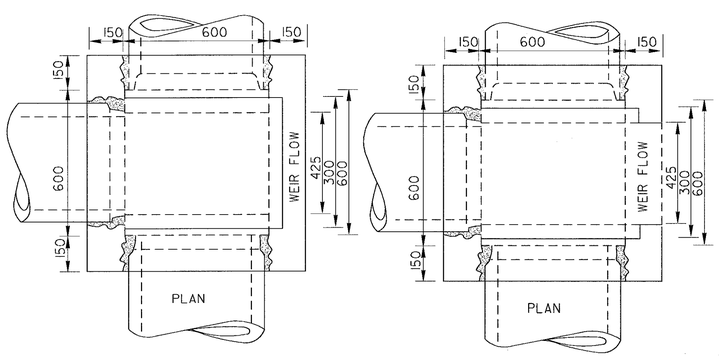

DETAIL AND ARRANGEMENT OF LADDER BARS

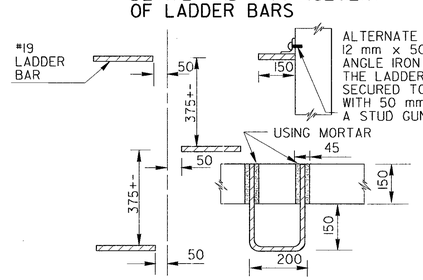

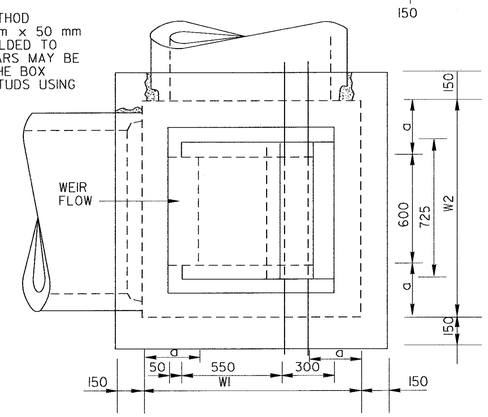

NOTE:
MINIMUM OF THREE #19 STEEL LADDER BARS ARE REQUIRED IN ALL DROP INLETS WHERE h IS GREATER THAN 1200 mm. NUMBER AND LOCATION OF LADDER BARS IN DROP INLET TO BE AS DIRECTED BY THE ENGINEER

PLASTIC OR RUBBER COATED M.H. STEPS APPROVED BY THE LABORATORY AND INSTALLED PER MANUFACTURERS RECOMMENDATIONS MAY BE SUBSTITUTED FOR THE LADDER BARS SHOWN.

DIMENSIONS FOR DROP INLETS

PIPE SIZE mm	TYPE "A"		TYPE "B"		TYPE "C"				TYPE "E"			
	MIN. h mm	MIN. H mm	MIN. h mm	MIN. H mm	W1or W2 mm	a mm	MIN. h mm	MIN. H mm	W1or W2 mm	a mm	MIN. h mm	MIN. H mm
375	600	712	775	987	600		775	987	600		775	987
450	687	900	850	1060	600		850	1062	600		850	1062
600					900	150	1287	1500	900	150	1375	1575
750					1050	225	1462	1675	1050	225	1550	1750
900					1200	300	1537	1850	1200	300	1775	1875
1050					1350	375	1512	2000	1350	375	1900	2100
1200					1500	450	1887	2175	1500	450	2075	2275
1350					1650	525	2162	2350	1650	525	2250	2450
1500					1800	600	2337	2225	1800	600	2425	2625

NOTE:
REBAR SIZES ARE PER ASTM A615 M, SI UNITS. EQUIVALENT U.S. STANDARD SIZE AND/OR EQUAL STEEL AREAS WILL BE ALLOWED.

NOTE:
DIMENSIONS ARE IN MILLIMETERS UNLESS SPECIFIED OTHERWISE.

12-06-96	DATE	DEPARTMENT OF TRANSPORTATION STATE OF GEORGIA
METRIC REINFORCING	REVISION	STANDARD PRECAST DROP INLET (METRIC) MAY 1996
RWU	BY	DES. ____ DRW. ____ TRA. ____ CHK. ____ (SUBMITTED) STATE ROAD & AIRPORT DESIGN ENGR. (APPROVED) CHIEF ENGINEER
		NUMBER 1019A PRECAST