STATE	PROJECT NUMBER	SHEET NO.	TOTAL SHEETS
GA.	STP-209-1(1)	364	513

TYPICAL LOCATIONS FOR CURB CUT RAMPS - PLAN VIEW

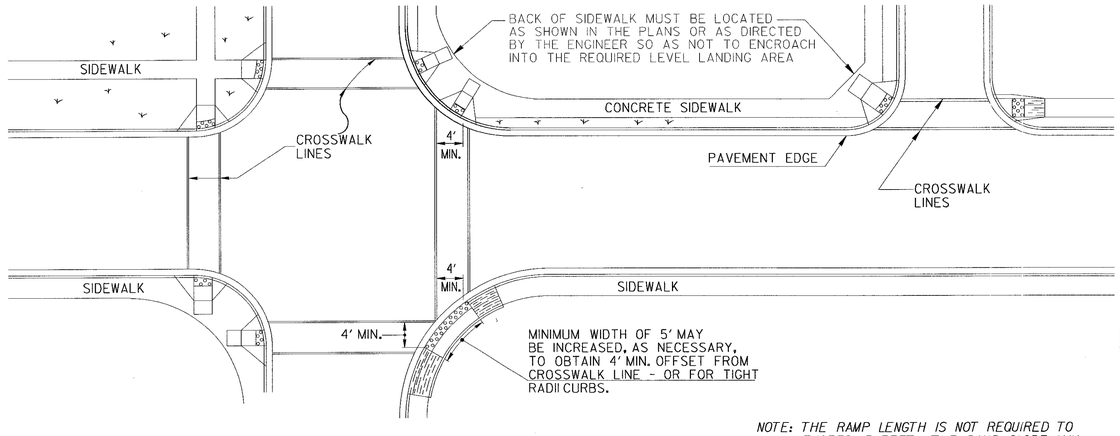

NOTE: THE RAMP LENGTH IS NOT REQUIRED TO EXCEED 15 FEET. THE RAMP SLOPE MAY EXCEED 12:1 IF THE SITE CONDITIONS PREVENT THE USE OF A RAMP 15 FEET LONG.

GUTTER TRANSITION DETAIL

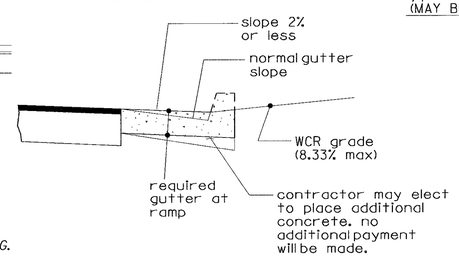

CONCRETE SIDEWALK DETAILS

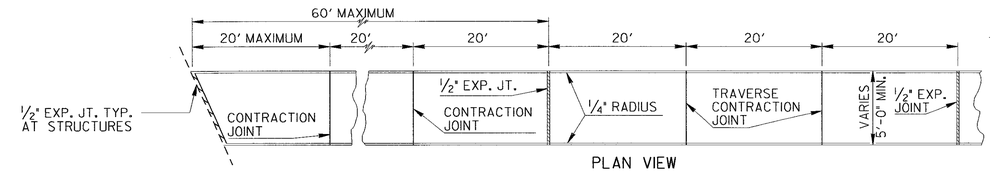

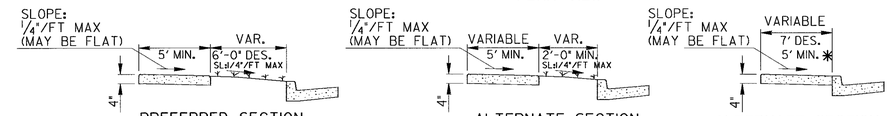

PREFERRED SECTION WITH 6' GRASS STRIP

*16' SHOULDER RECOMMENDED WITH THIS INSTALLATION

ALTERNATE SECTION WITH GRASS STRIP

ALTERNATE SECTION WITHOUT GRASS STRIP

*5' MIN WIDTH WITH NO OBSTRUCTIONS (MAILBOXS, SIGNS, ETC)

7' PREFERRED WIDTH WITH A 2' AREA OF CONTRASTING COLOR & TEXTURE ADJACENT TO THE CURB. (COST OF TEXTURE, COLORING & HOLES REQUIRED FOR MAILBOX AND SIGN POST SHALL BE INCLUDED IN THE PRICE BID FOR SIDEWALK)

NOTES FOR CONCRETE SIDEWALKS

A. CONCRETE TO BE PLACED 4" THICK AND FINISHED WITH TAMPS, WOOD FLOATS AND STIFF-BRISTLE BROOMS.

B. TRANSVERSE CONTRACTION JOINTS SHALL BE PLACED AT 20 FT. INTERVALS. ALL EDGES TO BE ROUNDED TO 1/4" RADIUS.

C. 1/2" EXPANSION JOINTS SHALL BE PLACED, WHERE SIDEWALKS TIE INTO A STRUCTURE OR TERMINATE AT CURB, RAMPS OR DRIVEWAYS AND AT 60' INTERVALS.

NOTES FOR CURB CUT RAMPS:

1. CURB CUT RAMPS WILL BE LOCATED AS FOLLOWS UNLESS PLANS OR CONTRACT SPECIFY OTHERWISE.
   a) AT ALL PEDESTRIAN CROSSWALKS WHERE CURB IS CONSTRUCTED OR REPLACED.
   b) WHERE THE SIDEWALK, CONCRETE OR UNPAVED, IS INTERRUPTED BY THE CURB AT TURNOUTS OR AT INTERSECTIONS.
   c) AT OTHER LOCATIONS SUCH AS HOSPITALS, NURSING HOMES, REST AREAS, ETC., WHERE THE CURB WOULD OTHERWISE BE AN OBSTRUCTION TO THE PHYSICALLY DISABLED.
2. RAMPS WILL BE CONSTRUCTED FROM CONCRETE. SPECIFICATIONS FOR RAMP WILL BE THE SAME AS FOR CONCRETE SIDEWALK. RAMPS SHALL HAVE EITHER A ROUGH OR A TEXTURED FINISH.
3. DROP INLETS ARE NOT TO BE LOCATED DIRECTLY IN FRONT OF RAMPS. CATCH BASINS SHOULD BE LOCATED AT LEAST 10 FT. FROM RAMPS WHEN FEASIBLE.
4. WHERE RAMPS ARE LOCATED IN RADII, THE DIMENSIONS SHOWN FOR RAMP WIDTHS AND TAPERS ARE MEASURED PERPENDICULAR TO THE RAMP AND NOT ALONG THE CURVE.
5. WHERE UTILITY STRUCTURES CONFLICT, WHERE SIDEWALK GEOMETRY VARIES, AT SKEWED INTERSECTIONS, OR IN OTHER SPECIAL CASES, THE RAMP DESIGNS MAY BE MODIFIED BY THE DESIGNER OR ENGINEER, PROVIDED THAT THE WIDTH REMAINS A MINIMUM OF 48 INCHES, AND NO SLOPE ON THE ACCESSIBLE PART OF THE RAMP IS STEEPER THAN 12:1.
6. LIN. FT. OF CURB AND GUTTER WILL INCLUDE THE TRANSITIONED CURB IN FRONT OF RAMPS. SQ. YDS. OF CONCRETE SIDEWALK AND CONCRETE MEDIAN PAVING WILL INCLUDE RAMPS. NO ADDITIONAL PAYMENT WILL BE MADE FOR CURB RAMPS.
   NO ADDITIONAL PAYMENT WILL BE MADE FOR SAWING AND REMOVING EXISTING SIDEWALK OR CURB WHERE NECESSARY FOR RAMP CONSTRUCTION
7. WHEN A CURB RAMP IS PLACED ON EXISTING PAVEMENT, THE PAVEMENT SHALL BE REMOVED TO PROVIDE A MINIMUM THICKNESS OF 3 INCHES OF CONCRETE AT ALL LOCATIONS. NO SEPARATE PAYMENT WILL BE MADE FOR THE REMOVAL OF THE PAVEMENT.

Type A

(The Prefered Ramp)

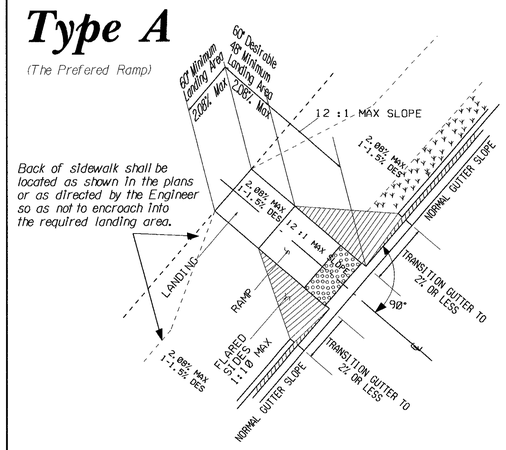

Type B

(Normally used when space is not available for a landing at the top of a Type A Ramp)

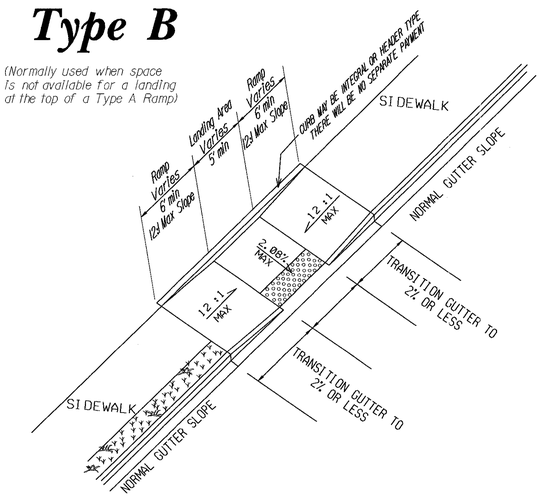

Type D

(Normally used when the sidewalk ties directly into the crosswalk)

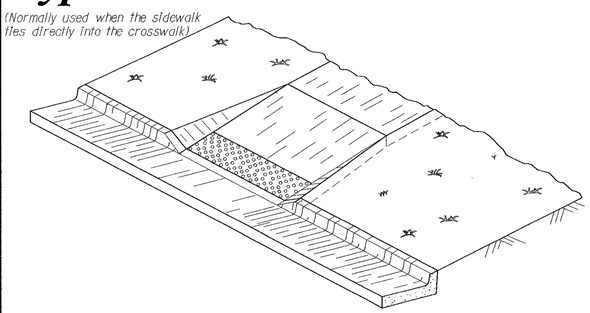

IN AREAS WHERE THE GUTTER HAS A SLOPE 1" IN 1' END NORMAL GUTTER SLOPE AT A DISTANCE OF 6 TO 10 FEET FROM THE RAMP AND BEGIN TRANSITION TO A FLAT GUTTER SLOPE. NORMAL GUTTER SLOPE SHALL BE RESUMED AT A SIMILAR DISTANCE BEYOND THE RAMP.

Type C

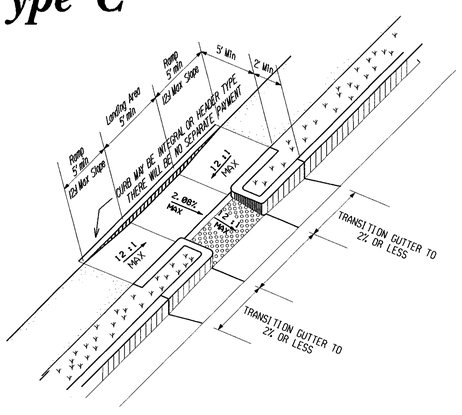

Skewed Ramp Details

(Applies to Type A & Type D Ramps Only)

WHEN THE RAMP CENTERLINE IS NOT PERPENDICULAR TO THE CURB A LEVEL LANDING AREA WITH SLOPES LESS THAN 2.08% MUST BE PROVIDED AT THE BOTTOM OF THE RAMP.

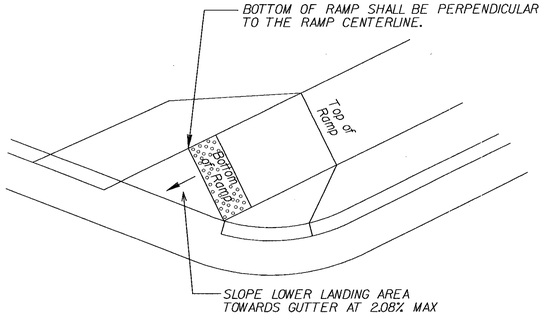

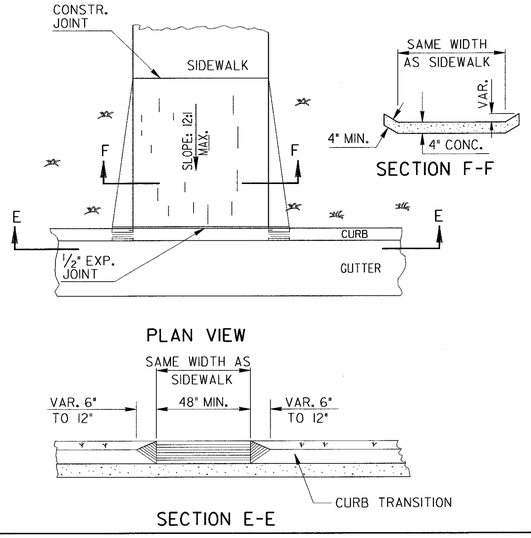

This Detail Replaces Ga Standard 9031W

Guidelines For Usage On Metric Projects

When these details are incorporated into plans and or projects that are being prepared or constructed in metric units, exact or precise conversion to metric units is not required. The dimensions shown that are in feet and inches may be converted to corresponding metric units using the following "Rounded-Off" conversion factors: 1" =25mm, 4"=100mm, and 12" or 1' =300mm. All measurement notes that refer to linear feet and square yards shall be interpreted to mean linear meters and square meters.

REVISION	DATE	BY
REVISED	2-21-03	
REVISED	2-10-03	
REVISED	7-29-02	
REVISED	5-29-02	
REVISED	5-23-02	
REVISED	5-13-02	
REVISED	4-29-02	
REVISED	4-11-02	
REVISED	4-3-02	
REVISED	3-28-02	

DEPARTMENT OF TRANSPORTATION
STATE OF GEORGIA

SPECIAL DETAIL
CONCRETE SIDEWALK DETAILS
CURB CUT (WHEELCHAIR) RAMPS

NO SCALE — MARCH 12, 2002

A3