COUNTY	PROJECT NUMBER	SHEET NO.	TOTAL SHEETS
FAYETTE	STP-209-1(1)	345	513

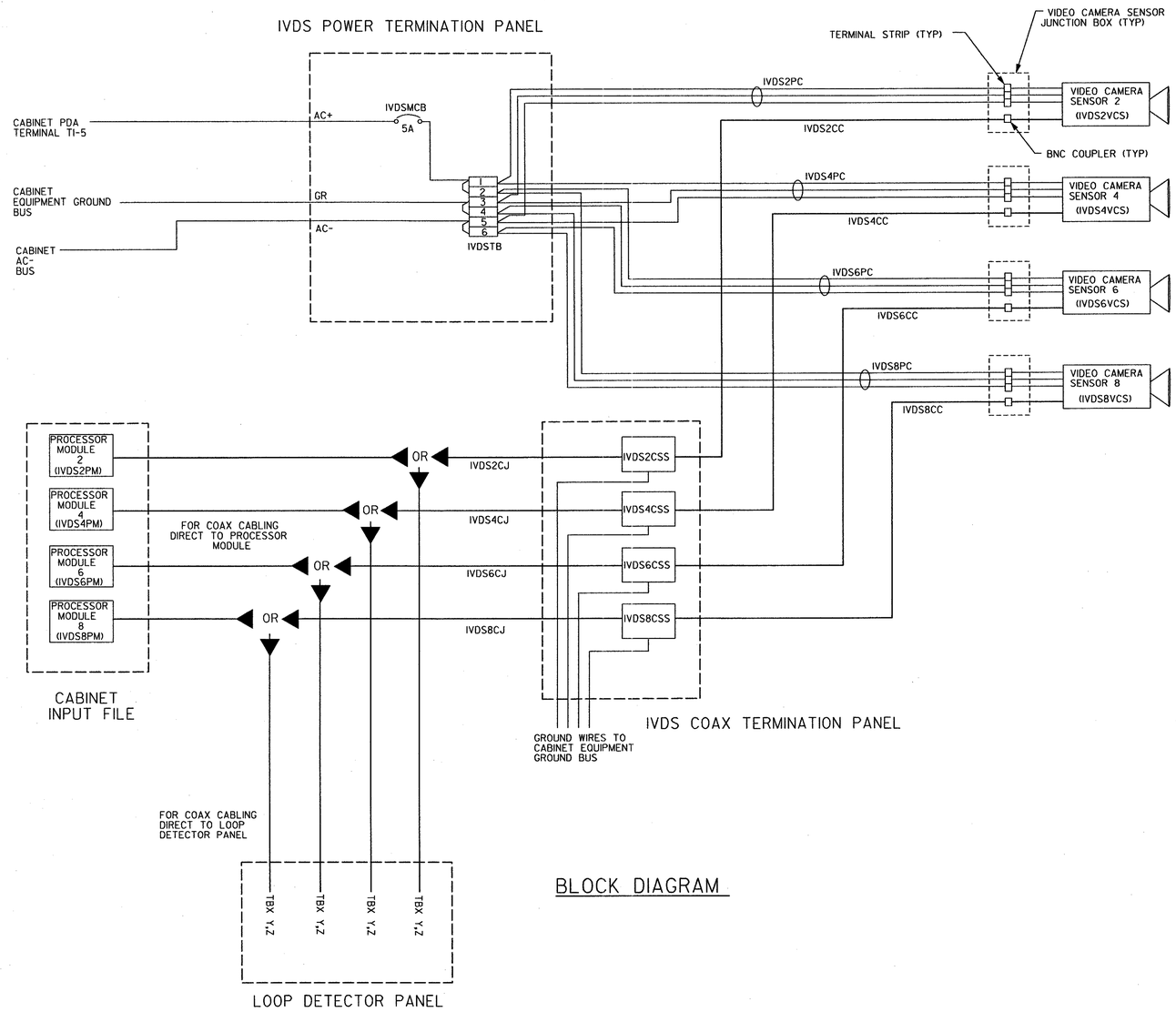

BLOCK DIAGRAM

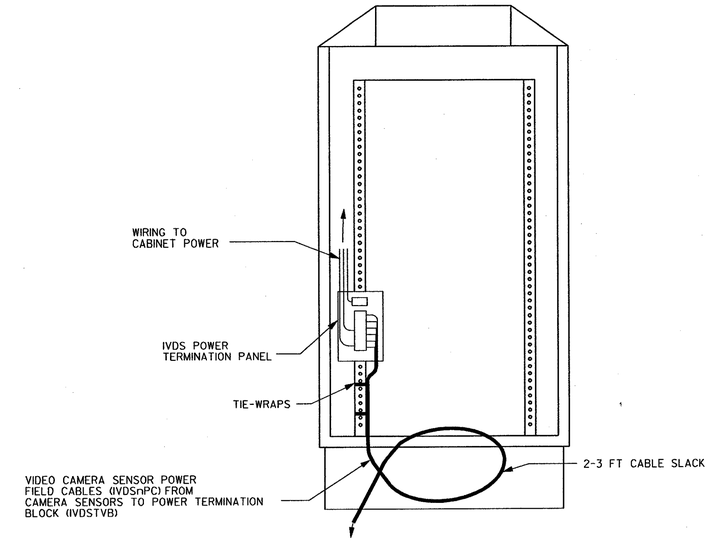

332 OR 336S CABINET-REAR VIEW

NTS

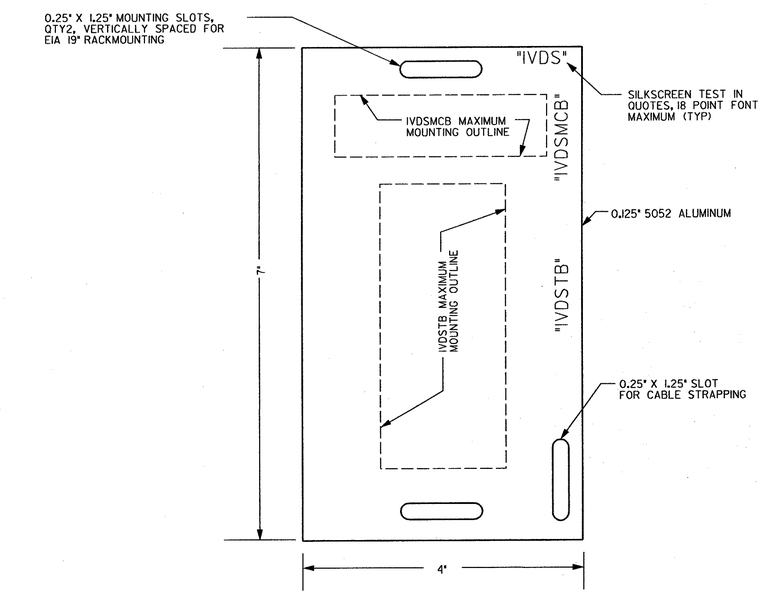

IVDS POWER TERMINATION PANEL

NTS

Guidelines For Usage On Metric Projects

When these details are incorporated into plans and or projects that are being prepared or constructed in metric units, exact or precise conversion to metric units is not required. The dimensions shown that are in feet and inches may be converted to corresponding metric units using the following "Rounded-Off" conversion factors: 1" =25mm, 4"=100mm, and 12" or 1' =300mm. All measurement notes that refer to linear feet and square yards shall be interpreted to mean linear meters and square meters.

GEORGIA
DEPARTMENT OF TRANSPORTATION

- NO SCALE -

DATE	REVISIONS

STATE OF GEORGIA
DEPARTMENT OF TRANSPORTATION

OFFICE: TRAFFIC SAFETY & DESIGN

SIGNAL PLANS

IVDS DETAILS
BLOCK DIAGRAM/POWER TERM PANEL
APRIL 2001

DRAWING No. 27-

MW 07-26-10 08:02:01 V:\TSD\DGN\27-IVDS.DGN