COUNTY	PROJECT NUMBER	SHEET NO.	TOTAL SHEETS
FAYETTE	STP-209-1(1)	342	513

AERIAL BUTT SPLICE DETAIL

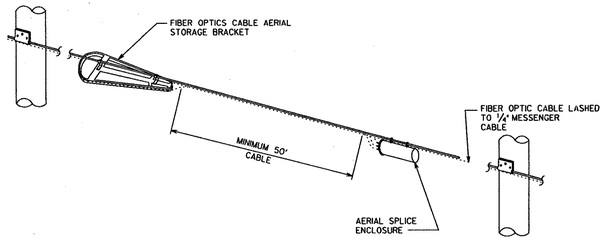

AERIAL SLACK LOOP DETAIL

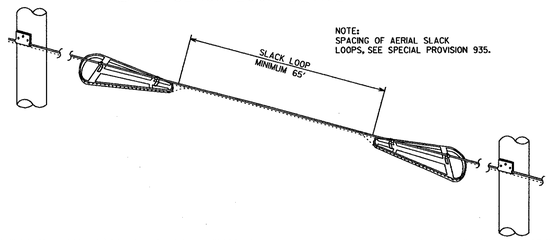

AERIAL DROP DETAIL

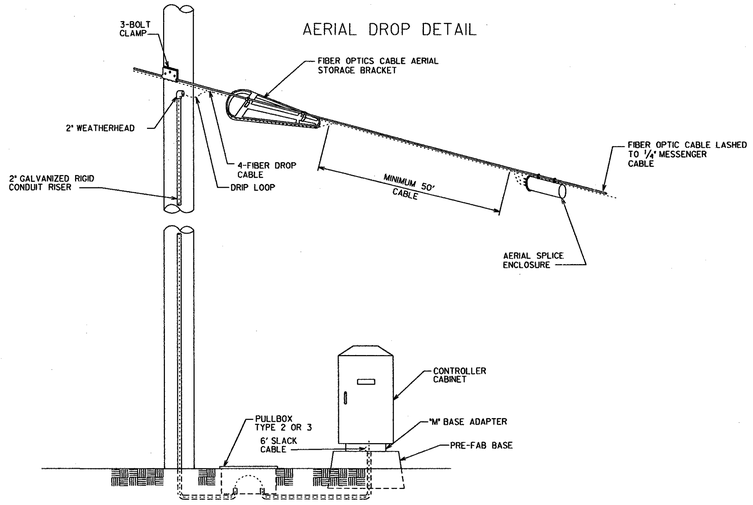

FIBER OPTIC DETAIL DROP - CABLE TERMINATION IN CONTROL CABINET MODEL 332 - MASTER SYSTEM

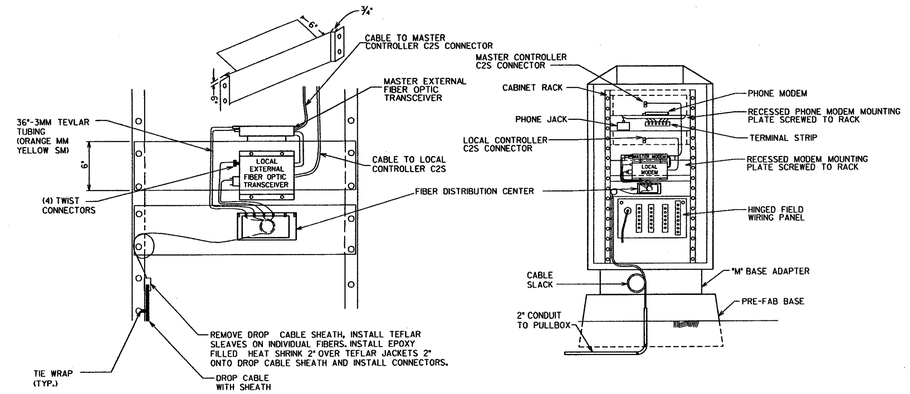

FIBER OPTIC DETAIL DROP-CABLE TERMINATION IN CONTROL CABINET - MODEL 332 LOCAL SYSTEM

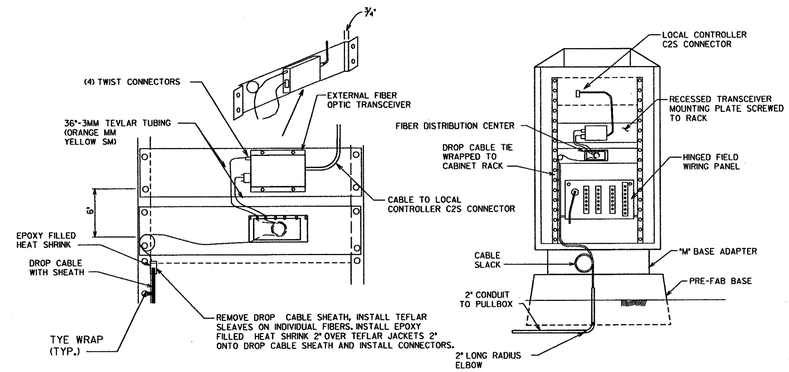

GEORGIA
DEPARTMENT OF TRANSPORTATION

- NO SCALE -

DATE	REVISIONS
11/01/2000	ADDED FIBER OPTIC DISTRIBUTION CENTER
11/01/2000	ADDED PULLBOX 2
12/18/2001	CHANGED TITLE OF DROP CABLE TERMINATION

STATE OF GEORGIA
DEPARTMENT OF TRANSPORTATION
OFFICE: TRAFFIC SAFETY & DESIGN
SIGNAL PLANS

FIBER OPTIC DETAILS
SHEET 1 OF 2
DECEMBER 2001

TS-10
DRAWING No. 27-

ts10 - fiber optic details sh 3/10/2006 10:14:28 AM