STATE	PROJECT NUMBER	SHEET NO.	TOTAL SHEETS
GA.	STP-209-1(1)	319	513

MISCELLANEOUS REGULATORY SIGN DETAILS

-NO SCALE-

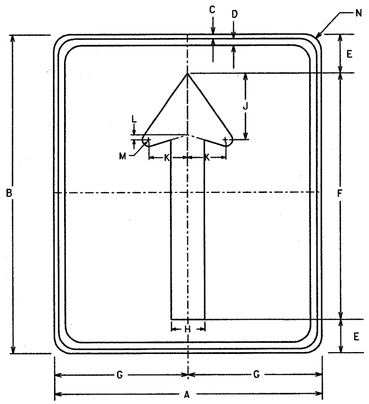

R3-5Ta

SIGN	DIMENSIONS (MILLIMETERS)												
	A	B	C	D	E	F	G	H	J	K	L	M	N
	750	900	15	20	100	700	375	95	195	110	15	20	50

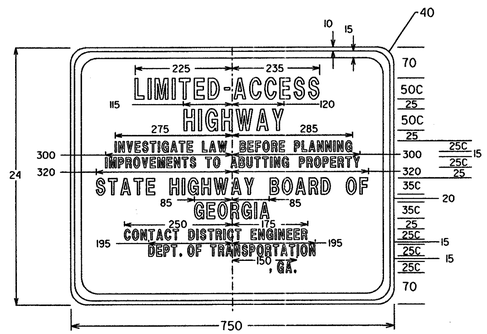

R552-1

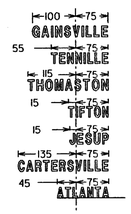

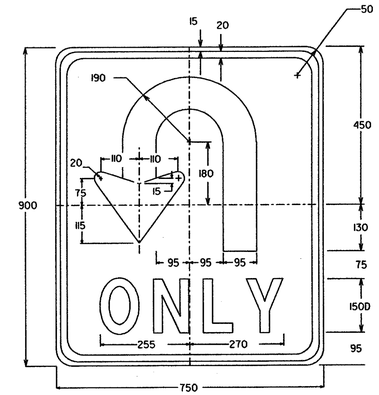

R553-5

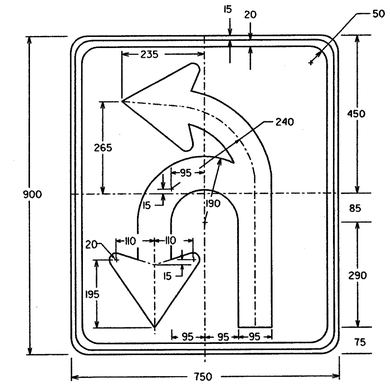

R553-6

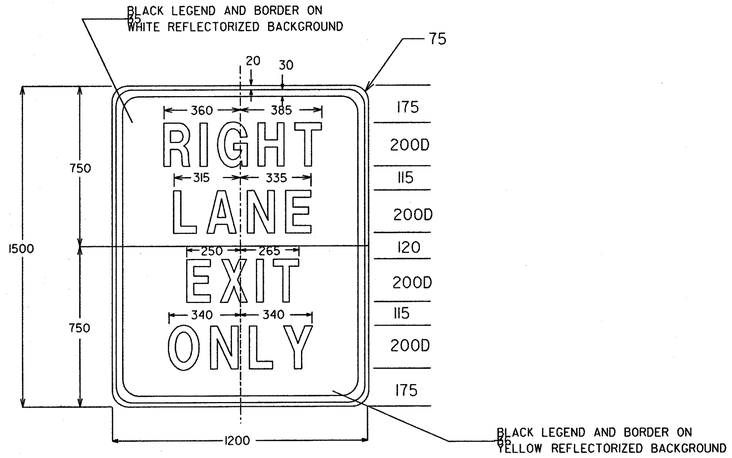

R553-7

NOTE : ALL DIMENSIONS ARE IN MILLIMETERS UNLESS OTHERWISE INDICATED.

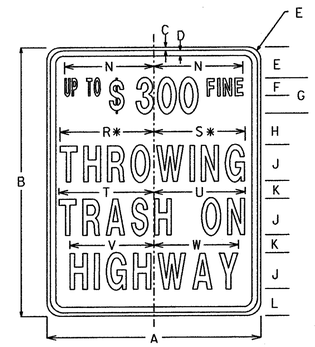

R553-1

* REDUCE SPACING 20%

SIGN	DIMENSIONS (MILLIMETERS)																	
	A	B	C	D	E	F	G	H	J	K	L	M	N	R	S	T	U	V	W
STD & MIN	600	750	10	15	90	50B	100C	85	100C	50	75	40	250	265	260	275	255	240	240
EXPWY	900	200	15	20	100	75B	150C	150	150C	75	150	55	375	400	390	410	385	355	360
FWY	200	500	20	30	175	100B	175C	200	200C	100	150	75	500	535	520	545	515	475	485

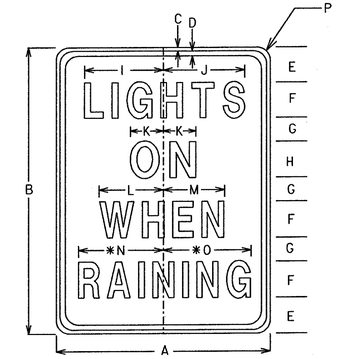

R554-1

* REDUCE SPACING 30 %

SIGN	DIMENSIONS (MILLIMETERS)														
	A	B	C	D	E	F	G	H	I	J	K	L	M	N	O	P
STD & MIN	600	750	10	15	90	100D	55	100E	220	235	100	170	185	235	250	40
EXPWY	900	200	15	20	150	150D	100	150E	350	350	140	275	260	360	275	65
FWY	200	500	20	30	185	200D	110	200E	435	455	175	365	345	475	490	75

NOTE : ALL DIMENSIONS ARE IN MILLIMETERS UNLESS OTHERWISE INDICATED.

NOTE:
SIGNS SHALL HAVE BLACK LEGENDS AND BORDERS ON WHITE REFLECTORIZED BACKGROUNDS UNLESS NOTED OTHERWISE.

DATE	REVISIONS
12/19/95	

GEORGIA
DEPARTMENT OF TRANSPORTATION
DETAILS OF
MISCELLANEOUS REGULATORY
SIGNS
NO SCALE — OCTOBER 2, 1995

DRWN. BY: MDN. 1-93

PCB07B