STATE	PROJECT NUMBER	SHEET NO.	TOTAL SHEETS
GA.	STP-209-1(1)	299	513

REVISION DATES

Metric

VOID

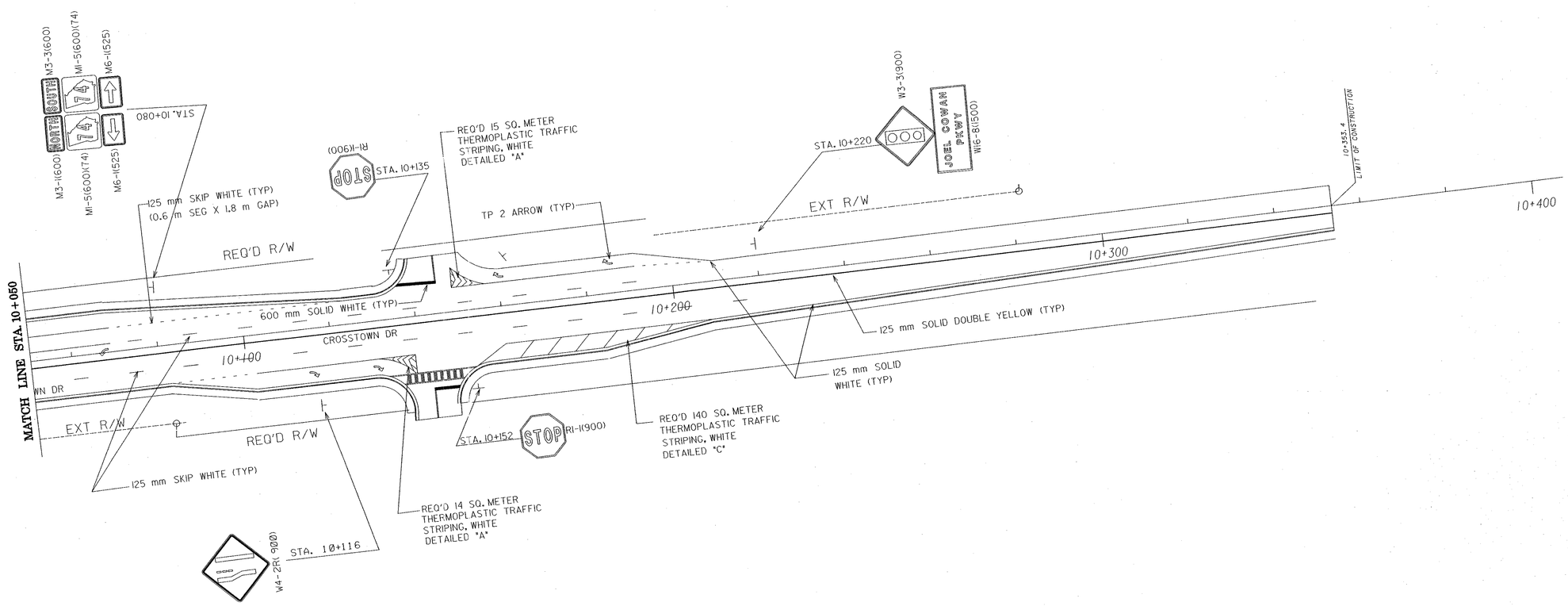

RATIO = 1:500

0 10 20 40

SCALE IN METERS

STATE OF GEORGIA
DEPARTMENT OF TRANSPORTATION
OFFICE OF TRAFFIC OPERATIONS

SR 74 (CROSSTOWN DR)
SIGNING AND MARKING PLANS
STA. 10+050 TO STA. 10+353

DRAWING No.
SM-11