STATE	PROJECT NUMBER	SHEET NO.	TOTAL SHEETS
GA.	STP-209-1 (1) FAYETTE	6	513

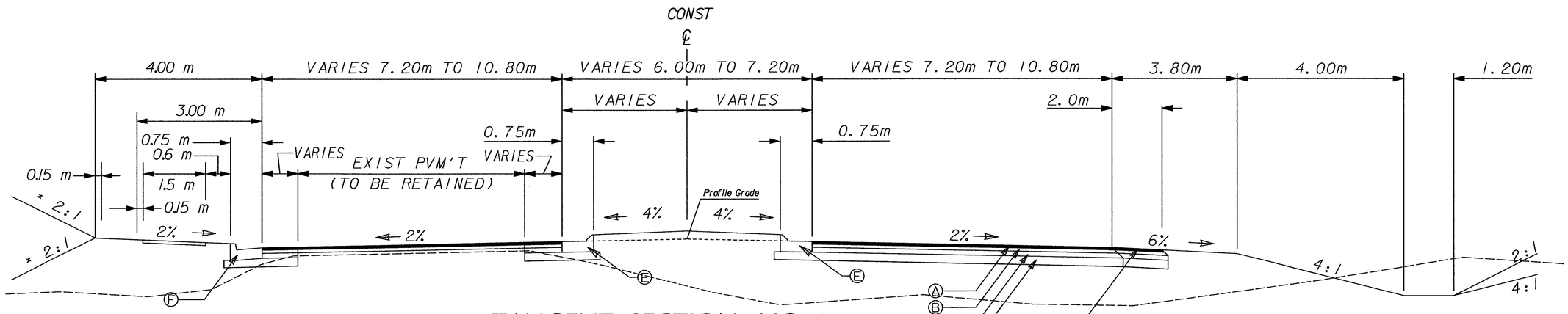

TANGENT SECTION NO. 3

TYPICAL SECTION APPLIES TO SR 74: STA. 11+521 TO 11+773
13+876 TO 13+928 ✳

✳ WIDENING & SIDEWALK ON RT SIDE

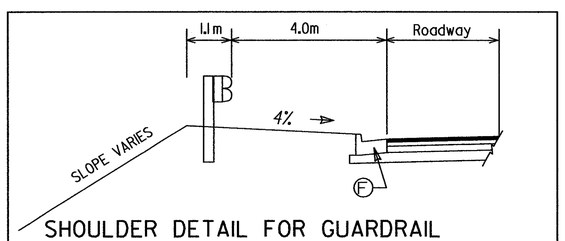

SHOULDER DETAIL FOR GUARDRAIL

SEE PLAN FOR LOCATION

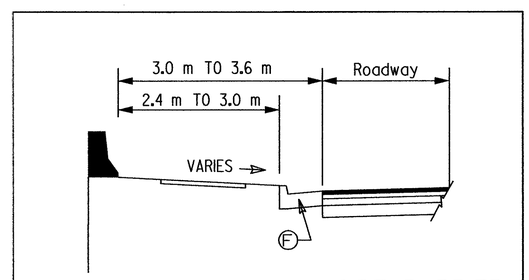

SHOULDER DETAIL FOR SIDE BARRIER

SEE PLAN FOR LOCATION

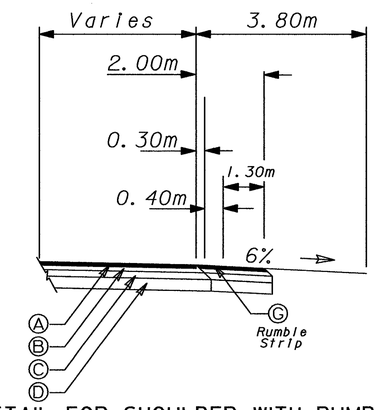

DETAIL FOR SHOULDER WITH RUMBLE STRIPS

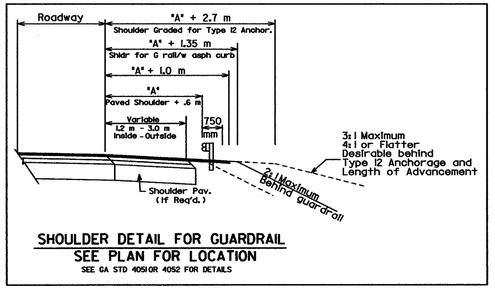

SHOULDER DETAIL FOR GUARDRAIL
SEE PLAN FOR LOCATION
SEE GA STD 4051OR 4052 FOR DETAILS

REQUIRED PAVEMENT

(A) ASPHALTIC CONC.- 12.5 mm SUPERPAVE, GP 2 ONLY, INCL BITUM MATL & H LIME, 90 kg/m2
(B) ASPHALTIC CONC.- 19 mm SUPERPAVE, GP 1 OR 2, INCL BITUM MATL & H LIME, 240 kg/m2
(C) ASPHALTIC CONC. BASE - 25 mm SUPERPAVE, GP 1 OR 2, INCL BITUM MATL & H LIME, 300 kg/m2
(D) GRADED AGG. BASE, 305 mm
(E) GA. STD. 9032B TYPE 7 CURB & GUTTER, 200 mm x 750 mm
(F) GA. STD. 9032B TYPE 2 CURB & GUTTER, 200 mm x 750 mm
(G) INDENTATION RUMBLE STRIPS - GROUND-IN-PLACE (SKIP)

SLOPE CONTROLS		
SLOPE	CUT	FILL
4 : 1	0 - 1.8 m	0 - 3.0 m
3 : 1	1.8 - 3.0 m	——
2 : 1	OVER 3.0 m	OVER 3.0 m

✳ 2 : 1 SLOPES OVER 2 m REQUIRE GUARDRAIL

RATIO=1:100

0 2 4 8

SCALE IN METERS

PROJECT NO: STP-209-1 (1)
COUNTY: FAYETTTE
P.I. NO. 322350
MAINLINE SECTION
SR 74 / JOEL COWAN PKWY