STATE	PROJECT NUMBER	SHEET NO.	TOTAL SHEETS
GA.	STP-209-1 (1) FAYETTE	5	513

REV. 4-29-06

TYPICAL SECTIONS

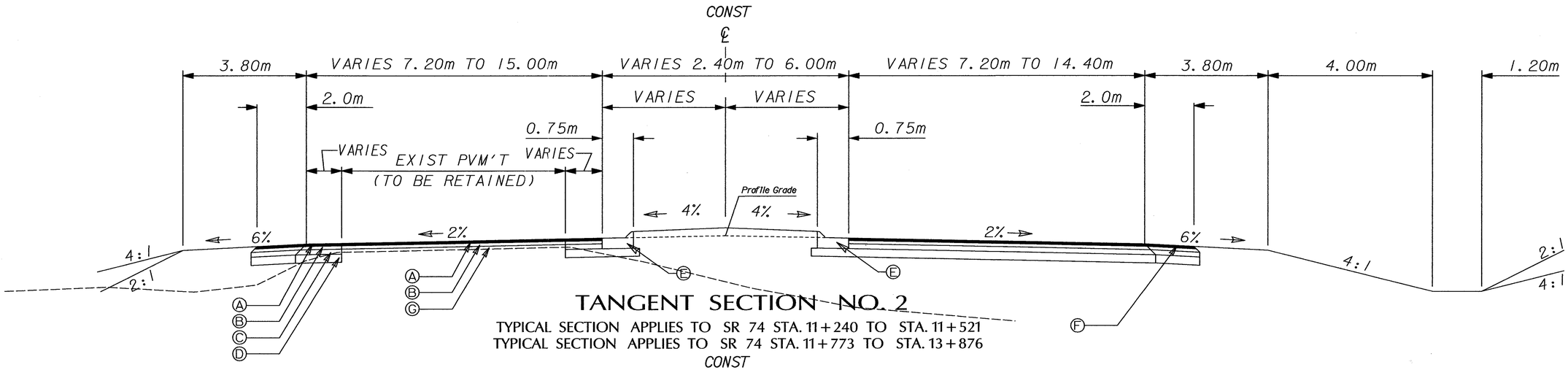

TANGENT SECTION NO. 2

TYPICAL SECTION APPLIES TO SR 74 STA. 11+240 TO STA. 11+521
TYPICAL SECTION APPLIES TO SR 74 STA. 11+773 TO STA. 13+876

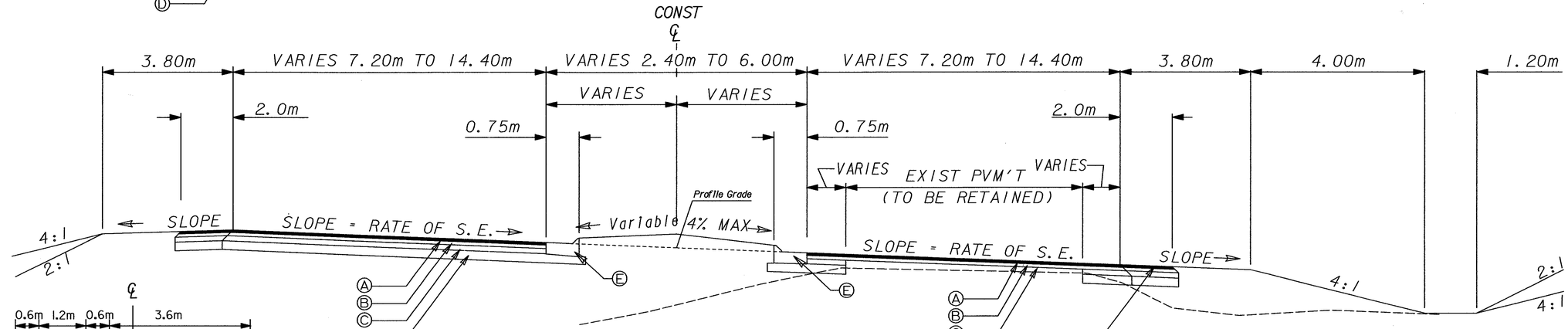

SUPERELEVATED SECTION

SEE CONSTRUCTION PLANS FOR SUPERELEVATED SECTIONS

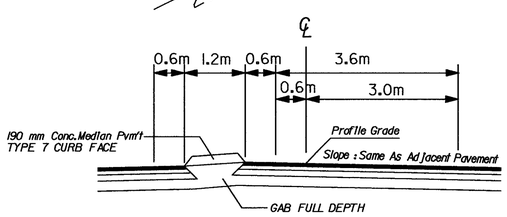

DETAIL FOR MEDIAN TURN LANE

SEE PLAN FOR LOCATION

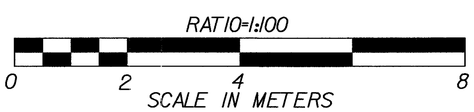

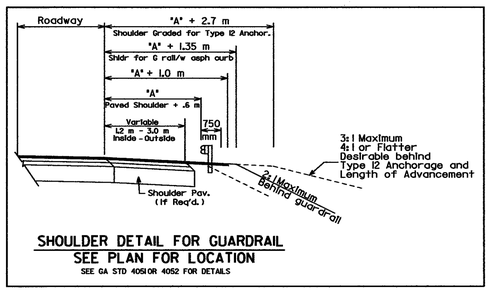

SHOULDER DETAIL FOR GUARDRAIL

SEE PLAN FOR LOCATION

SEE GA STD 4051OR 4052 FOR DETAILS

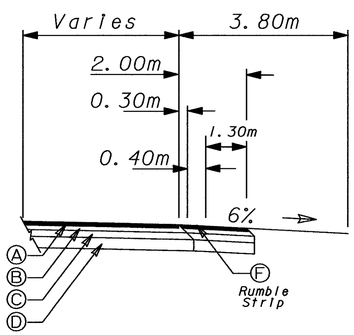

DETAIL FOR SHOULDER WITH RUMBLE STRIPS

REQUIRED PAVEMENT

(A) ASPHALTIC CONC.- 12.5 mm SUPERPAVE, GP 2 ONLY, INCL BITUM MATL & H LIME, 90 kg/m
(B) ASPHALTIC CONC.- 19 mm SUPERPAVE, GP 1 OR 2, INCL BITUM MATL & H LIME, 240 kg/m2
(C) ASPHALTIC CONC. BASE - 25 mm SUPERPAVE, GP 1 OR 2, INCL BITUM MATL & H LIME, 300 kg/m2
(D) GRADED AGG. BASE, 305 mm
(E) GA. STD. 9032B TYPE 7 CURB & GUTTER, 200 mm x 750 mm
(F) INDENTATION RUMBLE STRIPS - GROUND-IN-PLACE (SKIP)
(G) ASPHALTIC CONC. LEVELING AS REQ'D

SLOPE CONTROLS		
SLOPE	CUT	FILL
4 : 1	0 - 1.8 m	0 - 3.0 m
3 : 1	1.8 - 3.0 m	——
2 : 1	OVER 3.0 m	OVER 3.0 m

✱2 : 1 SLOPES OVER 2 m REQUIRE GUARDRAIL

PROJECT NO: STP-209-1 (1)
COUNTY: FAYETTTE
P.I. NO. 322350
MAINLINE SECTION
SR 74 / JOEL COWAN PKWY