11/6/2003 10:05:37 AM \\GDOT-DSN1\GOPLOT\OCF\00_8850_MYLAR.OCF BRICHEY L:\BRICHEY\2530P.PRF

STATE	PROJECT NUMBER	SHEET NO.	TOTAL SHEETS
GA.	STP-164-1(36)	224B	302

ADDED 11/06/03

CULVERT SIZE		DESIGN I-A 2 FT. MINIMUM COVER				DESIGN I-B 3 FT. MINIMUM COVER					CULVERT SIZE	
CLEAR SPAN(FT)	CLEAR HEIGHT(FT.)	T (INCHES)	MINIMUM AREAS OF CIRCUMFERENTIAL REINFORCING STEEL (SQ.IN.PER LIN.FT.)			MAXIMUM FILL HEIGHTS (FEET)	MINIMUM AREA OF CIRCUMFERENTIAL REINFORCING STEEL (SQ. IN. PER LIN.FT.)			MAXIMUM FILL HEIGHTS (FEET)	T (INCHES)	CLEAR HEIGHT(FT.)	CLEAR SPAN(FT)
S	H		A_{S1}	A_{S2}	A_{S4}		A_{S1}	A_{S2}	A_{S4}			H	S
4'	3	6	0.21	0.27	0.12	16	0.13	0.18	0.12	10	6	3	4'
	4	6	0.18	0.30	0.12	16	0.12	0.19	0.12	10	6	4	
	5	6	0.24	0.33	0.14	16	0.15	0.23	0.14	10	6	5	
	6	7	0.27	0.37	0.17	16	0.20	0.27	0.17	10	7	6	
5'	3	6	0.26	0.29	0.14	16	0.17	0.21	0.14	10	6	3	5'
	4	6	0.24	0.33	0.14	16	0.16	0.23	0.14	10	6	4	
	5	6	0.20	0.35	0.14	16	0.14	0.25	0.14	10	6	5	
	6	7	0.25	0.39	0.17	16	0.18	0.29	0.17	10	7	6	
6'	3	7	0.32	0.33	0.17	16	0.23	0.23	0.17	10	7	3	6'
	4	7	0.27	0.37	0.17	16	0.20	0.27	0.17	10	7	4	
	5	7	0.25	0.39	0.17	16	0.18	0.29	0.17	10	7	5	
	6	7	0.23	0.41	0.17	16	0.17	0.30	0.17	10	7	6	
7'	4	8	0.35	0.41	0.19	16	0.25	0.27	0.19	10	8	4	7'
	5	8	0.31	0.44	0.19	16	0.23	0.29	0.19	10	8	5	
	6	8	0.28	0.42	0.19	14	0.21	0.34	0.19	10	8	6	
	7	8	0.26	0.44	0.19	14	0.19	0.36	0.19	10	8	7	
8'	4	8	0.43	0.40	0.19	10	0.33	0.30	0.19	8	8	4	8'
	5	8	0.38	0.43	0.19	10	0.30	0.33	0.19	8	8	5	
	6	8	0.35	0.47	0.19	10	0.27	0.35	0.19	8	8	6	
	7	8	0.33	0.50	0.19	10	0.25	0.38	0.19	8	8	7	
	8	8	0.31	0.53	0.19	10	0.24	0.43	0.19	8	8	8	
9'	4	9	0.47	0.45	0.22	10	0.38	0.38	0.22	8	9	4	9'
	5	9	0.43	0.45	0.22	10	0.35	0.39	0.22	8	9	5	
	6	9	0.40	0.48	0.22	10	0.32	0.42	0.22	8	9	6	
	7	9	0.37	0.52	0.22	10	0.30	0.45	0.22	8	9	7	
	8	9	0.35	0.54	0.22	10	0.28	0.47	0.22	8	9	8	
	9	9	0.33	0.57	0.22	10	0.27	0.49	0.22	8	9	9	
	10	10	0.35	0.61	0.24	10	0.30	0.55	0.24	8	10	10	
10'	4	10	0.50	0.46	0.24	10	0.44	0.42	0.24	8	10	4	10'
	5	10	0.47	0.46	0.24	10	0.41	0.42	0.24	8	10	5	
	6	10	0.44	0.50	0.24	10	0.38	0.45	0.24	8	10	6	
	7	10	0.41	0.53	0.24	10	0.35	0.48	0.24	8	10	7	
	8	10	0.38	0.56	0.24	10	0.33	0.51	0.24	8	10	8	
	9	10	0.36	0.60	0.24	10	0.32	0.53	0.24	8	10	9	
	10	10	0.35	0.61	0.24	10	0.30	0.55	0.24	8	10	10	

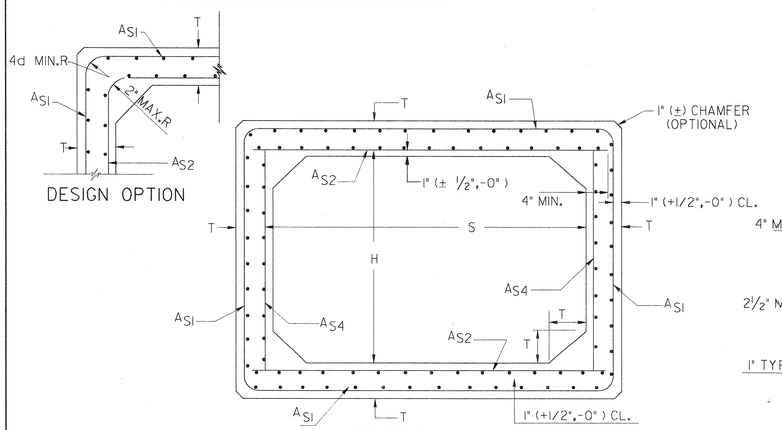

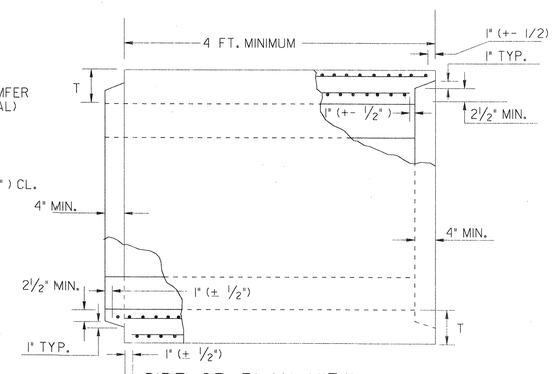

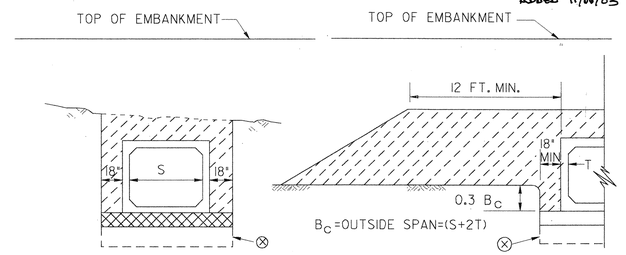

MINIMUM TRENCH DEPTH=0.3 Bc + BEDDING DEPTH

- 6" MIN. DEPTH OF FOUNDATION BACKFILL MATERIAL TYPE II FOR WET AREAS OR 3" MIN. DEPTH FOUNDATION BACKFILL MATERIAL TYPE I OTHERWISE. TYPE I AND II MATERIAL BOTH MAY BE USED IF SPECIFIED CLASS I SOIL SHALL BE REQUIRED FOR TYPE I BACKFILL MATERIAL.

- NORMAL BACKFILL COMPACTED IN 6" LAYERS BROUGHT UP EVENLY ON BOTH SIDES OF CULVERT FROM TOP OF BEDDING TO MINIMUM REQUIRED COVER.

⊗ FOR AN INCOMPRESSABLE FOUNDATION, INCREASE TRENCH UNDER BOX TO 12" MINIMUM, WHERE AN UNSTABLE MATERIAL IS ENCOUNTERED, ADDITIONAL EXCAVATION AND BACKFILLING TO DEPTHS AND WIDTHS SPECIFIED BY THE ENGINEER IS REQUIRED.

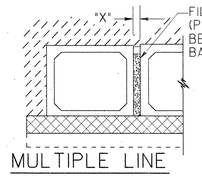

TYPICAL FILLERS	
MATERIALS ALTERNATES	SPACE "X"
GROUT	2" +_
CL. B CONC.	4" +_

NOTE: PAYMENT FOR CULVERT INCLUDE FILLER.

THE DIMENSION "X" SHALL BE COMPATIBLE WITH CULVERT END TREATMENT AND APRON WIDTHS, SPACERS SHALL BE USED BETWEEN BOXES IF BACKFILLED BEFORE FILLER SETS UP.

NOTE:
A CULVERT COMBINATION HAVING A TOTAL CLEAR SPAN & HEIGHT EQUAL TO OR EXCEEDING THAT SPECIFIED MAY BE SUBSTITUTED. EXAMPLE: A TRIPLE 6'x6' MAY BE SUBSTITUTED FOR A DOUBLE 9'x6' OR VICE VERSA.

GENERAL NOTES:

1. SPECIFICATIONS: GA. STANDARD, CURRENT EDITION, AND SUPPLEMENTS THERETO, CONCRETE SHALL CONFORM TO SECTION 843, 5000 P.S.I. MINIMUM.
2. REINFORCING REQUIREMENTS NOT SHOWN SHALL BE ACCORDING TO A.A.S.H.T.O. M-259, MINIMUM CLEARANCE FOR CIRCUMFERENTIAL REINFORCMENT SHALL BE 1", WITH LESS THAN 1" OF CLEARANCE BEING CAUSE FOR REJECTION.
3. ALL JOINTS BETWEEN PRECAST SECTIONS SHALL BE TONGUE & GROOVE WITH JOINT MATERIAL. JOINTS BETWEEN CAST-IN-PLACE AND PRECAST SECTIONS SHALL HAVE LONGITUDINAL STEEL EXTENDING FROM TOP, BOTTOM AND BOTH SIDE SLABS OF THE PRECAST BOX TIED TO THE CAST-IN-PLACE REINFORCEMENT.
4. CULVERTS LARGER THAN THE SPECIFIED SIZE MAY BE SUBSTITUTED WITH PAYMENT BEING BASED UPON THE SPECIFIED SIZE RATHER THAN THE SUBSTITUTION, SUCH A SUBSTITUTION MUST BE APPROVED BY THE ENGINEER, MINIMUM COVER MUST BE RETAINED AND NO ADVERSE AFFECTS PRODUCED.
5. ALTERNATES: CAST-IN-PLACE BOX CULVERTS OR OTHER APPROVED PRECAST DESIGNS.
6. LOADING: HS-20 AND ANY FILL HEIGHTS BETWEEN THE MINIMUM AND MAXIMUM SHOWN.
7. ONLY ONE DESIGN OF PRECAST BOX CULVERT IS TO BE USED FOR ANY INSTALLATION.

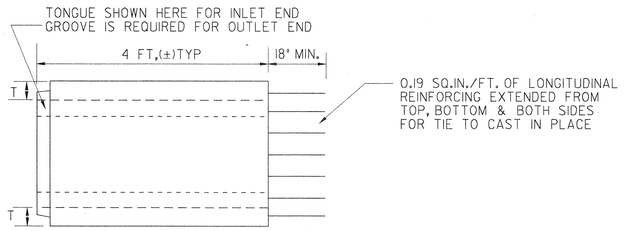

CONNECTOR BOX TYPE C
(USE FOR CONNECTION TO CAST-IN-PLACE)

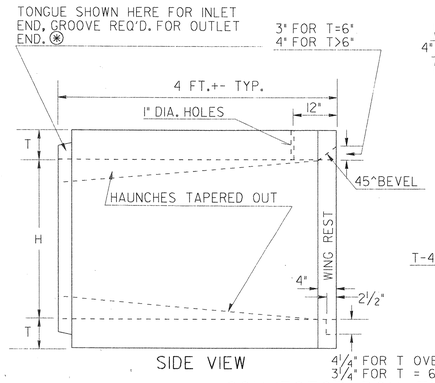

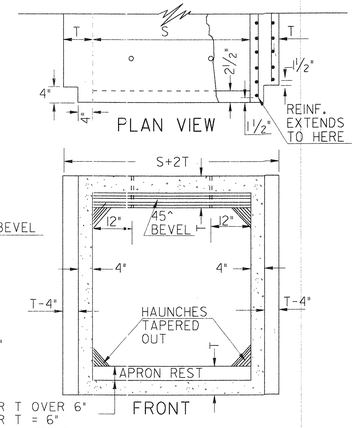

CONNECTOR BOX TYPE P
(USE FOR CONNECTION TO PRECAST ENDS)

6-27-85	DATE	DEPARTMENT OF TRANSPORTATION STATE OF GEORGIA
MADE 4" JT. DEPTH MIN	REVISION	STANDARD PRECAST BOX CULVERT BARRELS 4'x3' THRU 10'x10' SINGLE & MULTIPLE LINES
		NO SCALE — MARCH 1985
R.M.U.	BY	DES. R.M.U. (SUBMITTED) DRW. R.M.U. STATE ROAD & AIRPORT DESIGN ENGR. TRA. G.M.E. (APPROVED) CHK. R.K.C. STATE HIGHWAY ENGINEER
		NUMBER 2530P

11/6/2003 10:05:37 AM \\GDOT-DSN1\GOPLOT\OCF\00_8850_MYLAR.OCF BRICHEY L:\BRICHEY\2530P.PRF GO-RD3