STATE	PROJECT NUMBER	SHEET NO.	TOTAL SHEETS
GA.	STP-164-1(36)	6	302

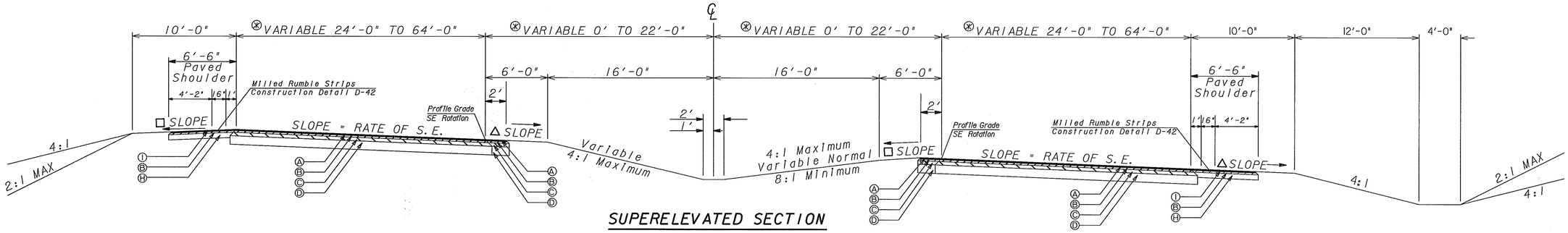

SUPERELEVATED SECTION

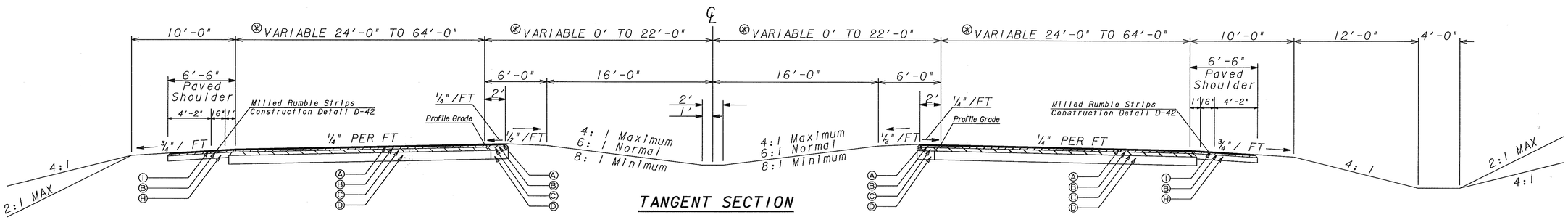

TANGENT SECTION

TYPICAL NO. 2
SR-34

APPLIES TO STA. 266+50 TO STA. 269+00
APPLIES TO STA. 278+50 TO STA. 299+50
APPLIES TO STA. 325+50 TO STA. 338+00
APPLIES TO STA. 343+00 TO STA. 393+50

(STA. 388+00.97 LT, 388+44.97 RT TO STA 389+44.64 LT, 388+88.64 RT DUAL BRIDGES OVER SHOAL CREEK)

⊗ WIDTHS VARY DUE TO TYPE "A" OR TYPE "B" CROSSOVERS AND ACCEL/DECEL LANES. SEE PLANS FOR ACTUAL WIDTHS.

SLOPE CONTROLS		
SLOPE	CUT	FILL
4:1	--	0-10'
3:1	--	--
2:1	ALL	OVER 10'

△ SLOPE ¾" / 1'-0" OR RATE OF S.E. WHICHEVER IS GREATER

□ SLOPE AS FOLLOWS:
S.E. RATE OF 0.03'/FT OR LESS USE ½" IN 1'-0"
S.E. RATE OF 0.04'/FT, USE ⅜" IN 1'-0"
S.E. RATE OF 0.05'/FT, USE ¼" IN 1'-0"
S.E. RATE OF 0.06'/FT, USE ⅛" IN 1'-0"
S.E. RATE OF 0.08'/FT, USE +0.01'/FT

ALGEBRAIC DIFFERENCE IN PAVING AND SHOULDER SLOPES NOT TO EXCEED 0.08'/FT

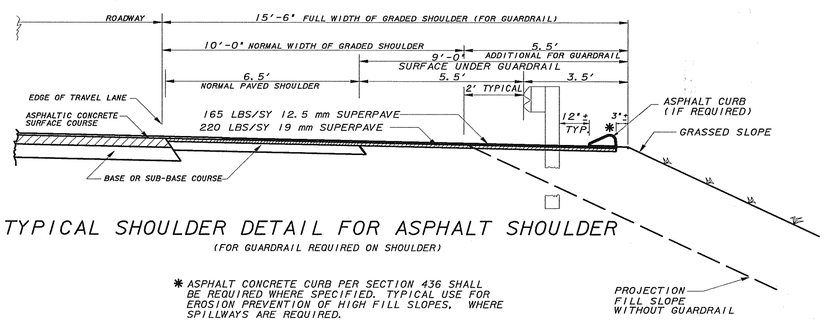

TYPICAL SHOULDER DETAIL FOR ASPHALT SHOULDER
(FOR GUARDRAIL REQUIRED ON SHOULDER)

✱ ASPHALT CONCRETE CURB PER SECTION 436 SHALL BE REQUIRED WHERE SPECIFIED. TYPICAL USE FOR EROSION PREVENTION OF HIGH FILL SLOPES, WHERE SPILLWAYS ARE REQUIRED.

REQUIRED PAVEMENT

Ⓐ ASPHALTIC CONCRETE 12.5 mm SUPERPAVE, 165 lb/yd², Mix Design Level C
Ⓑ ASPHALTIC CONCRETE 19 mm SUPERPAVE, 220 lb/yd², Mix Design Level C
Ⓒ ASPHALTIC CONCRETE 25 mm SUPERPAVE, 660 lb/yd², Mix Design Level B
Ⓓ GRADED AGGREGATE BASE, 14"
Ⓗ GRADED AGGREGATE BASE, 6"
Ⓘ ASPHALTIC CONCRETE 12.5 mm SUPERPAVE, 165 lb/yd², Mix Design Level A

DATE	REVISIONS	DATE	REVISIONS

GEORGIA DEPARTMENT OF TRANSPORTATION
TYPICAL SECTION
PROJECT STP-164-1(36)
COUNTY COWETA
DATE 6/30/03 SH 2 OF 5

DGN$SPECIFICATION$$$$$$$$$$$$$$$$$$$$
SHOWDATETIME$$$$$$

...\Drawings\S2340\sp.DGN 09/26/2013 09:31:17 AM