STATE	PROJECT NUMBER	SHEET NO.	TOTAL SHEETS
GA.	BRF00-0153-01(024)	191	312

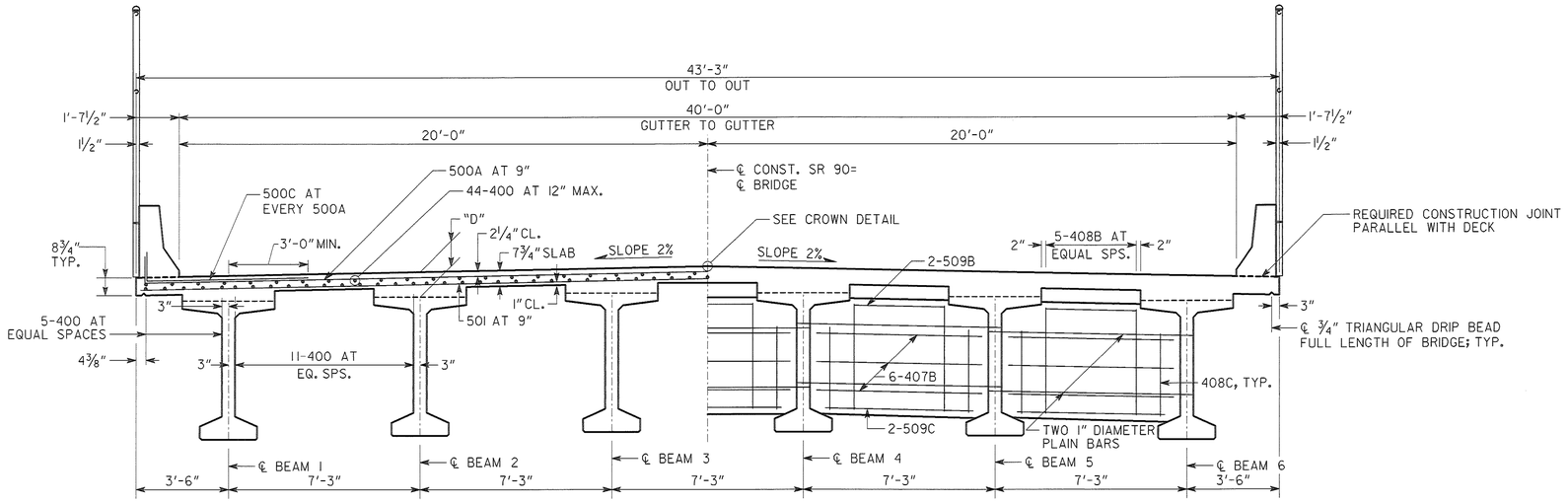

HALF SECTION THRU SLAB
LOOKING AHEAD

HALF SECTION THRU DIAPHRAGM
LOOKING AHEAD

DIMENSION "D" IS MEASURED FROM TOP OF SLAB TO TOP OF BEAMS AT CENTERLINE BEARING. VARY "D" BETWEEN BEARINGS TO COMPENSATE FOR DEAD LOAD, DEFLECTION, AND VERTICAL CURVE. MAINTAIN A CONSTANT SLAB THICKNESS OF 7¾" BETWEEN BEAMS AND 8¾" AT OVERHANGS.

"D" = 10¼" (BM 2-5)
"D" = 11¼" (BM 1 & 6)

NOTES:

1. MAINTAIN 2" CLEARANCE TO ALL REINFORCEMENT UNLESS OTHERWISE NOTED.
2. BARS 405 ARE PLACED PARALLEL TO BEAMS.

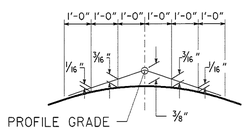

CROWN DETAIL
2% CROSS SLOPE

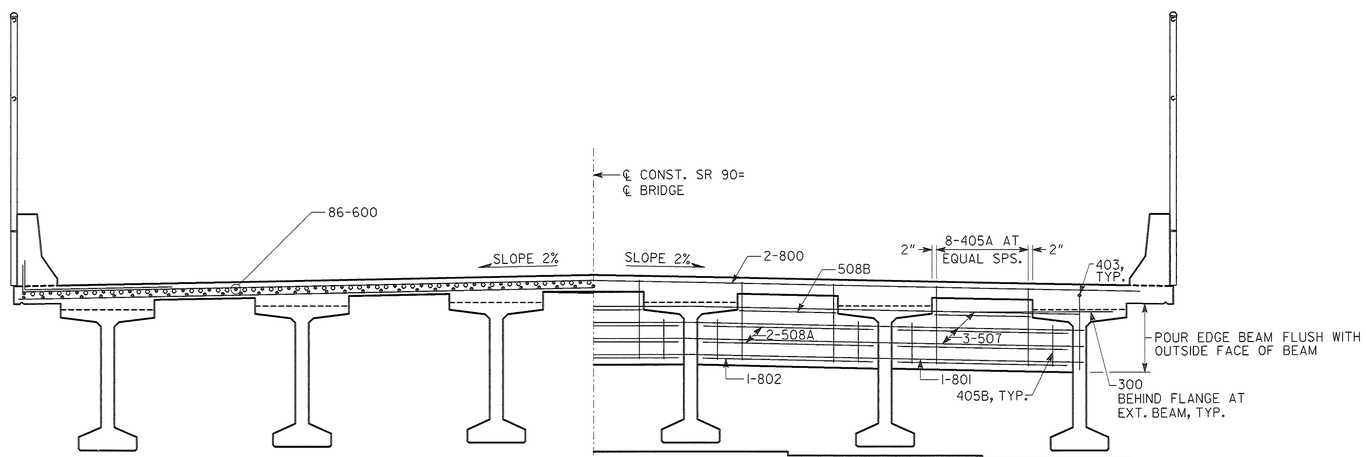

HALF SECTION THRU SLAB AT INTERMEDIATE BENT
LOOKING AHEAD

HALF SECTION THRU EDGE BEAM
BENT 2 (AHEAD)
BENT 3 (BACK)
LOOKING AHEAD

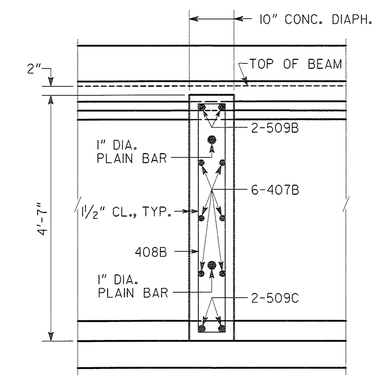

SLAB REINFORCEMENT NOT SHOWN

SECTION THRU DIAPHRAGM
NO SCALE

BRIDGE NO. 1

Heath & Lineback Engineers
INCORPORATED
2390 CANTON ROAD, BUILDING 200
MARIETTA, GEORGIA 30066-5393
(770)424-1668

GEORGIA
DEPARTMENT OF TRANSPORTATION
ENGINEERING DIVISION-OFFICE OF BRIDGES AND STRUCTURES

DATE | REVISIONS | BY

DECK SECTIONS - SPAN 2
SR 90 OVER
CSX TRANSPORTATION

MACON COUNTY BRF00-0153-01(024)

SCALE: ⅜" = 1'-0" MAY 2013

DRAWING NO. 35 - 005

BRIDGE SHEET 5 OF 13

DESIGNED KAK/BCB | CHECKED MS/BKA/GBL | REVIEWED WMD/DLC
DRAWN JJY | DESIGN GROUP DDF | APPROVED BFR

1 INCH WHEN PRINTED FULL SIZE

J:\ 2008050019\ BRIDGE \ 05_SR90_DS2.DGN