STATE	PROJECT NUMBER	SHEET NO.	TOTAL SHEETS
GA.	BRF00-0153-01(024)	189	312

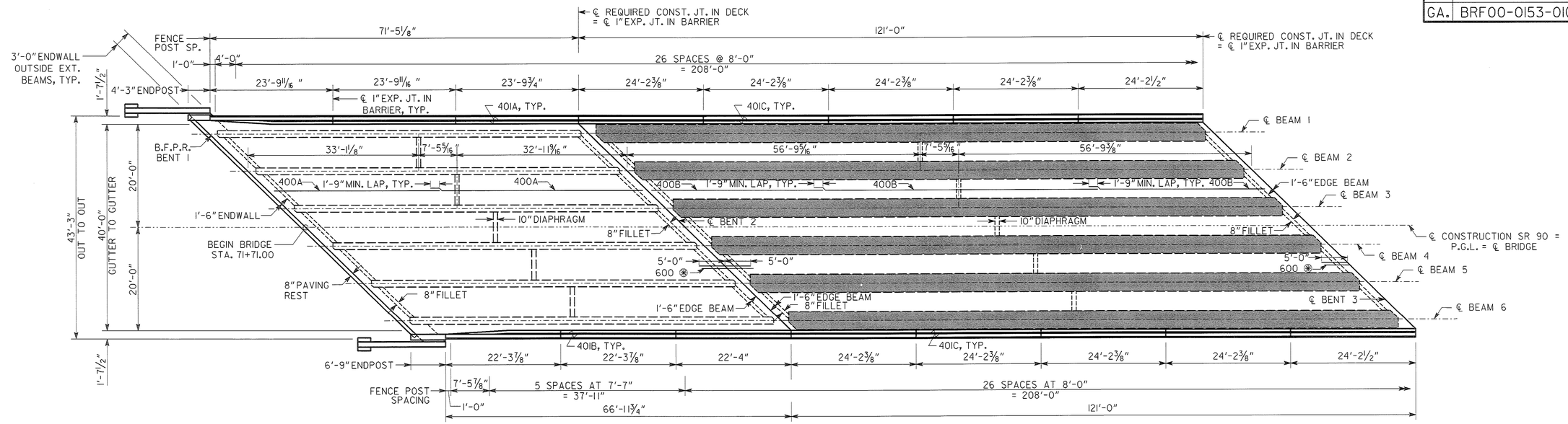

PLAN - SPAN 1

SPAN 3 SIMILAR

PLAN - SPAN 2

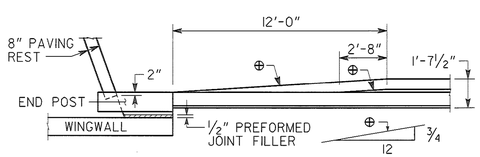

BARRIER TRANSITION DETAIL

NO SCALE

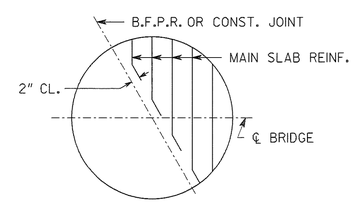

BARS ARE DETAILED IN BAR DETAILS AS EQUIVALENT FULL LENGTH BARS.

BAR BENDING DETAILS AT SKEWED JOINTS

NO SCALE

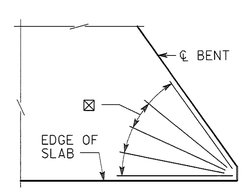

⊠ 5-500B IN EACH ACUTE CORNER ADJACENT TO INTERMEDIATE BENTS, TYP.

SKEWED CORNER DETAIL

NO SCALE

* TAPERS TO 0" AT END POST.

** AT CONTRACTOR'S OPTION, REPLACE 10" RADIUS WITH STRAIGHT INTERSECTING SLOPES.

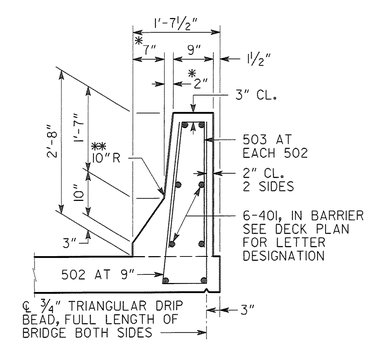

BARRIER DETAIL

NO SCALE

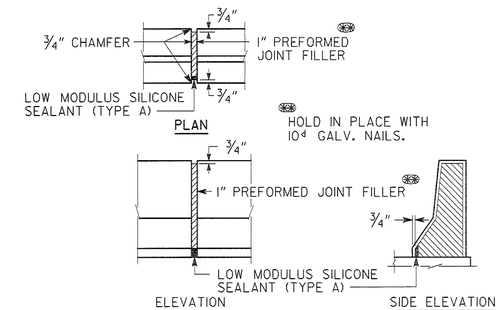

DETAILS OF 1" EXPANSION JOINT IN BARRIER

NO SCALE

NOTES:

1. MAINTAIN 2" CLEARANCE TO ALL REINFORCEMENT UNLESS OTHERWISE NOTED.

SUPERSTRUCTURE QUANTITIES				
ITEM	SPAN 1	SPAN 2	SPAN 3	TOTAL
LUMP - CY SUPERSTR. CONCRETE, CLASS "D"	109.1	162.7	109.1	380.9
LUMP - LB SUPERSTR. REINF. STEEL	26223	33655	26223	86101

END POST CONCRETE AND BAR REINFORCING STEEL INCLUDED IN END SPAN QUANTITIES.

⊛600 BAR QUANTITIES ARE INCLUDED IN SPANS 1 AND 3

BRIDGE NO. 1

Heath & Lineback Engineers
INCORPORATED
2390 CANTON ROAD, BUILDING 200
MARIETTA, GEORGIA 30066-5393
(770)424-1668

GEORGIA

DEPARTMENT OF TRANSPORTATION

ENGINEERING DIVISION-OFFICE OF BRIDGES AND STRUCTURES

DATE | REVISIONS | BY

DECK PLAN
SR 90 OVER
CSX TRANSPORTATION

MACON COUNTY BRF00-0153-01(024)

SCALE: 1" = 10'-0" MAY 2013

DRAWING NO. 35 - 003

BRIDGE SHEET 3 OF 13

DESIGNED KAK/BCB CHECKED MS/BKA/GBL REVIEWED WMD/DLC

DRAWN JJY DESIGN GROUP DDF APPROVED BFR

1 INCH WHEN PRINTED FULL SIZE

J:\2008030019\BRIDGE\03-SR90_DP.DGN