| STATE | PROJECT NUMBER | SHEET NO. | TOTAL SHEETS |
|---|---|---|---|
| GA. | BHF-164-1(31) | 216 | - |

DIMENSION "D" IS MEASURED FROM TOP OF SLAB TO TOP OF BEAMS AT CENTERLINE BEARING. VARY "D" BETWEEN BEARINGS TO COMPENSATE FOR DEAD LOAD DEFLECTION AND VERTICAL CURVE. MAINTAIN A CONSTANT SLAB THICKNESS OF 8⅜" BETWEEN BEAMS AND IN OVERHANGS.
"D" = 11"

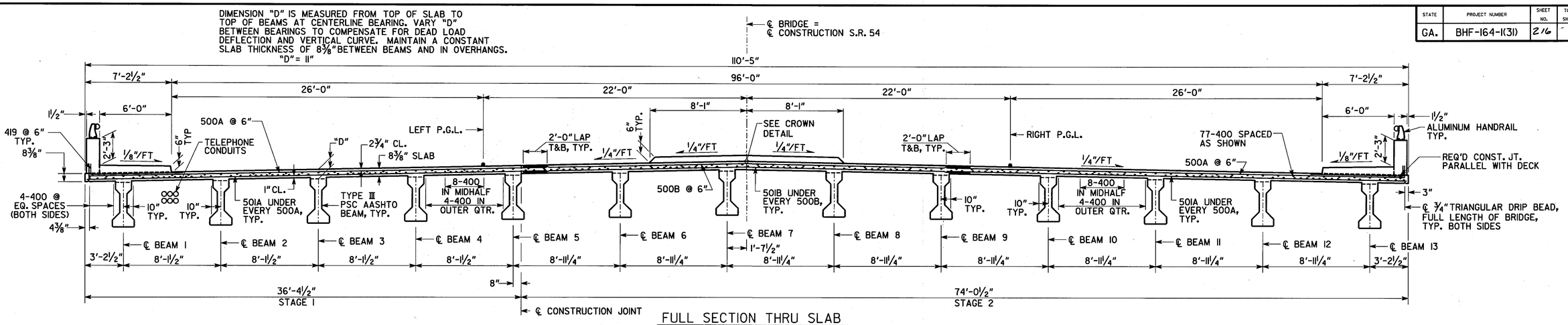


## FULL SECTION THRU SLAB

LOOKING AHEAD

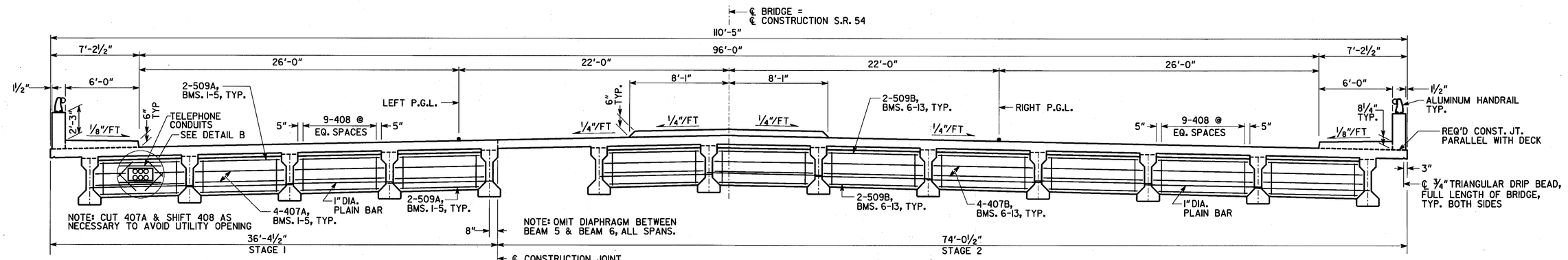


## FULL SECTION AT DIAPHRAGM

LOOKING AHEAD

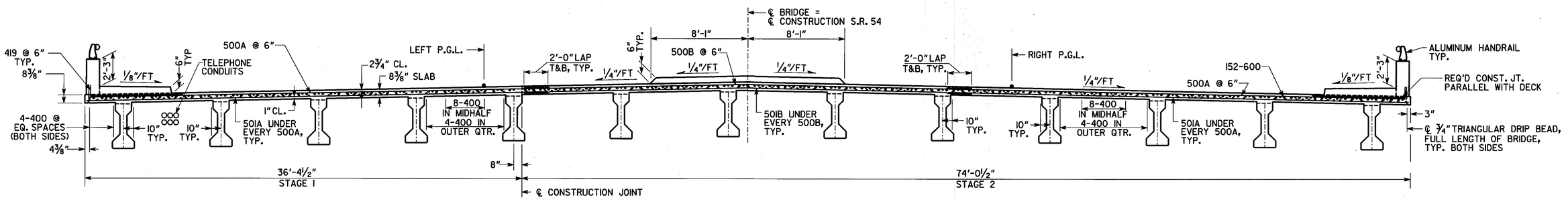


## FULL SECTION THRU SLAB AT INTER. BENT

LOOKING AHEAD

BRIDGE NO. 2

Heath & Lineback Engineers
INCORPORATED
12 POWDER SPRINGS STREET, SUITE 240
MARIETTA, GEORGIA 30064

GEORGIA
DEPARTMENT OF TRANSPORTATION
PRECONSTRUCTION DIVISION-OFFICE OF BRIDGE DESIGN

SUPERSTRUCTURE DETAILS
DECK SECTIONS
S.R. 54 BRIDGE OVER LINE CREEK

COWETA/FAYETTE COUNTIES BHF-164-1(31)

SCALE: ¼" = 1'- 0", UNLESS NOTED OTHERWISE JULY 2003

| DATE | REVISIONS | BY |
|---|---|---|
| | | |

BRIDGE SHEET 5 OF 17

| | | |
|---|---|---|
| DESIGNED BJ | CHECKED MS | REVIEWED JPT/MCD |
| DRAWN PH | DESIGN GROUP IAB | APPROVED PVL |

J:/8016/LINE_CREEK/BRIDGE/LINE_DSI.DGN