STATE	PROJECT NUMBER	SHEET NO.	TOTAL SHEETS
GA.	STP-164-1(30)	5	406

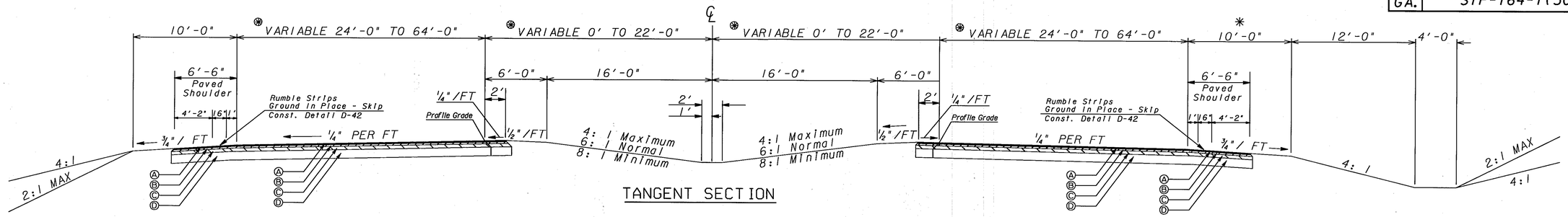

TANGENT SECTION

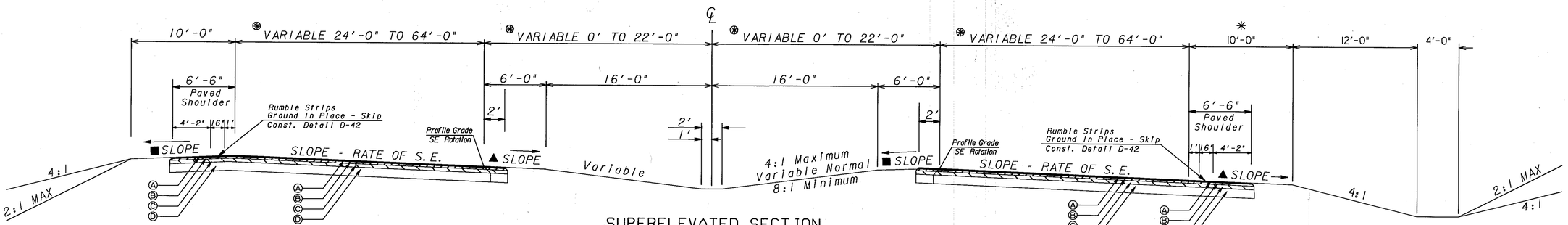

SUPERELEVATED SECTION

▲ SLOPE 3/4" / 1'-0" OR RATE OF S.E. WHICHEVER IS GREATER

■ SLOPE AS FOLLOWS:

S.E. RATE OF 0.03'/FT OR LESS USE 1/2" IN 1'-0"
S.E. RATE OF 0.04'/FT, USE 3/8" IN 1'-0"
S.E. RATE OF 0.05'/FT, USE 1/4" IN 1'-0"
S.E. RATE OF 0.06'/FT, USE 1/8" IN 1'-0"
S.E. RATE OF 0.08'/FT, USE +0.01'/FT

ALGEBRAIC DIFFERENCE IN PAVING AND SHOULDER SLOPES NOT TO EXCEED 0.08'/FT

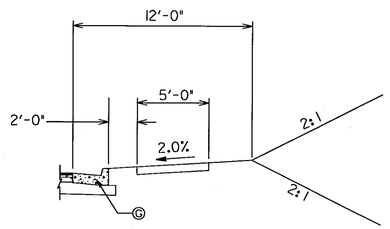

✱ CURB & GUTTER SECTION IS REQUIRED FROM STA 465+45 TO STA 474+00 EB (RIGHT SIDE)

TYPICAL NO. 1

SR 34 / SR 54

✱ APPLIES TO STA. 431+50 TO STA. 474+00

⊛ WIDTHS VARY DUE TO TYPE "A" OR TYPE "B" CROSSOVERS AND ACCEL/DECEL LANES. SEE PLANS FOR ACTUAL WIDTHS.

SLOPE CONTROLS		
SLOPE	CUT	FILL
4:1	--	0-10'
3:1	--	--
2:1	ALL	OVER 10'

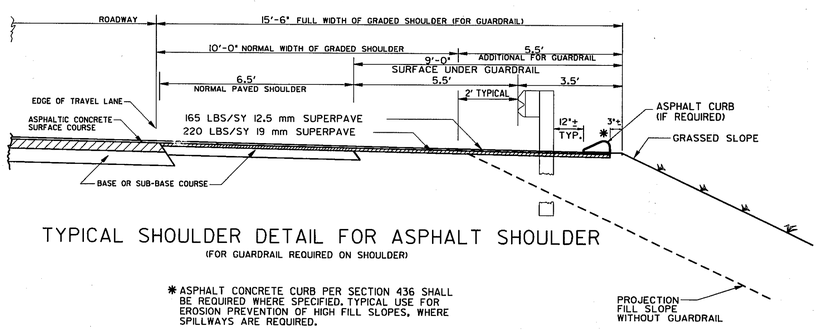

TYPICAL SHOULDER DETAIL FOR ASPHALT SHOULDER
(FOR GUARDRAIL REQUIRED ON SHOULDER)

✱ ASPHALT CONCRETE CURB PER SECTION 436 SHALL BE REQUIRED WHERE SPECIFIED. TYPICAL USE FOR EROSION PREVENTION OF HIGH FILL SLOPES, WHERE SPILLWAYS ARE REQUIRED.

REQUIRED PAVEMENT

Ⓐ ASPHALTIC CONCRETE 12.5 mm SUPERPAVE, 165 lb/yd^2, Mix Design Level C
Ⓑ ASPHALTIC CONCRETE 19 mm SUPERPAVE, 220 lb/yd^2, Mix Design Level C
Ⓒ ASPHALTIC CONCRETE 25 mm SUPERPAVE, 770 lb/yd^2, Mix Design Level B
Ⓓ GRADED AGGREGATE BASE, 14"

ALLOWABLE RANGES TABLE

FOR THIS PROJECT, CROSS SLOPES THAT ARE ADJUSTED TO "BEST FIT" EXISTING PAVEMENT SLOPES ARE SUBJECT TO THE FOLLOWING LIMITS:

A. NORMAL CROWN

SECTION WITH GRADES 0.5% OR GREATER	SECTION WITH GRADES LESS THAN 0.5%
0.0150 FT/FT - MINIMUM	0.0156 FT/FT - MINIMUM
0.0208 FT/FT - DESIRABLE	0.0208 FT/FT - DESIRABLE
0.0250 FT/FT - MAXIMUM	0.0300 FT/FT - MAXIMUM

B. SUPERELEVATION RATE

S.E. RATE SHOWN ON PLANS OR SE RATE EXISTING IN FIELD, WHICHEVER IS GREATER.

C. SUPERELEVATION TRANSITION LENGTH (LENGTH FROM FLAT POINT TO FULL SE)

	RATE OF CHANGE	CORRESPONDING DIFFERENCE IN GRADE BETWEEN PIVOT POINT AND EDGE OF PAVEMENT
MINIMUM	1:150	0.67%
DESIRABLE	1:200	0.50%
MAXIMUM	1:300	0.33%

LENGTH SHALL BE SET TO AVOID CREATING A FLAT GUTTER GRADE ON LOW SIDE AND TO AVOID FLAT CROSS SLOPES AT OR NEAR THE LOW POINT OF VERTICAL CURVES.

D. POSITIONING OF SUPERELEVATION TRANSITION LENGTH ON SIMPLE CURVES

50% OF TRANSITION INSIDE CURVE - MAXIMUM
33% OF TRANSITION INSIDE CURVE - DESIRABLE
20% OF TRANSITION INSIDE CURVE - MINIMUM

NOTE: CROWN WIPE-OUT SHALL BE AT THE SAME RATE AS THE SE TRANSITION.

E. SMOOTHING OF BREAKS IN EDGE PROFILE AT BEGIN AND END OF TRANSITION SHALL BE ACCOMPLISHED BY VERTICAL CURVE WITH A MINIMUM LENGTH (IN FEET) EQUAL TO THE SPEED DESIGN (IN MPH).

NOT TO SCALE

DATE	REVISIONS	DATE	REVISIONS

GEORGIA
DEPARTMENT OF TRANSPORTATION
TYPICAL SECTION
PROJECT STP-164-1(30)
COWETA AND FAYETTE COUNTIES
DATE 1/20/04 SHT 1 OF 6

DGN$SPECIFICATION$$$$$$$$$$$$$$$$$$$$$
SHOWDATETIME$$$$$$