3/5/2004 11:44:38 AM \\GDOT-DSN1\GOPLOT\OCF\go-8850_mylar.gcf msanders M:\322060\dgn\STP-164-1 (30)Final Plans\opt\apache\JavaWebApps\stds_dtls\files\gse1034ep.tif

STATE	PROJECT NUMBER	SHEET NO.	TOTAL SHEETS
GA	STP-164-1(30)	326B	406

ADDED 3/2/04

CATCH BASIN (IF CATCH BASIN HAS LONGITUDINAL PIPE OVER 24", SEE DETAILS AT RIGHT.)

NOTE: OPENING FOR PIPE SHALL BE THE OUTSIDE DIAMETER OF THE REQUIRED PIPE PLUS 1" MINIMUM OPENING SHALL HAVE CORRUGATIONS.

5 - #3 BARS @ 3" CENTERED OVER PEDESTAL; LENGTH W_1+4'8".

NOTE FOR ALL CATCH BASINS:

1/2" EXPANSION JOINT MATERIAL SHALL BE PLACED AROUND THE CATCH BASIN WHERE SIDEWALK OR MEDIAN PAVEMENT IS PLACED ADJACENT TO THE CATCH BASIN.

5 - #3 BARS @ 3" CENTERED OVER PEDESTAL; LENGTH 2'-10½"

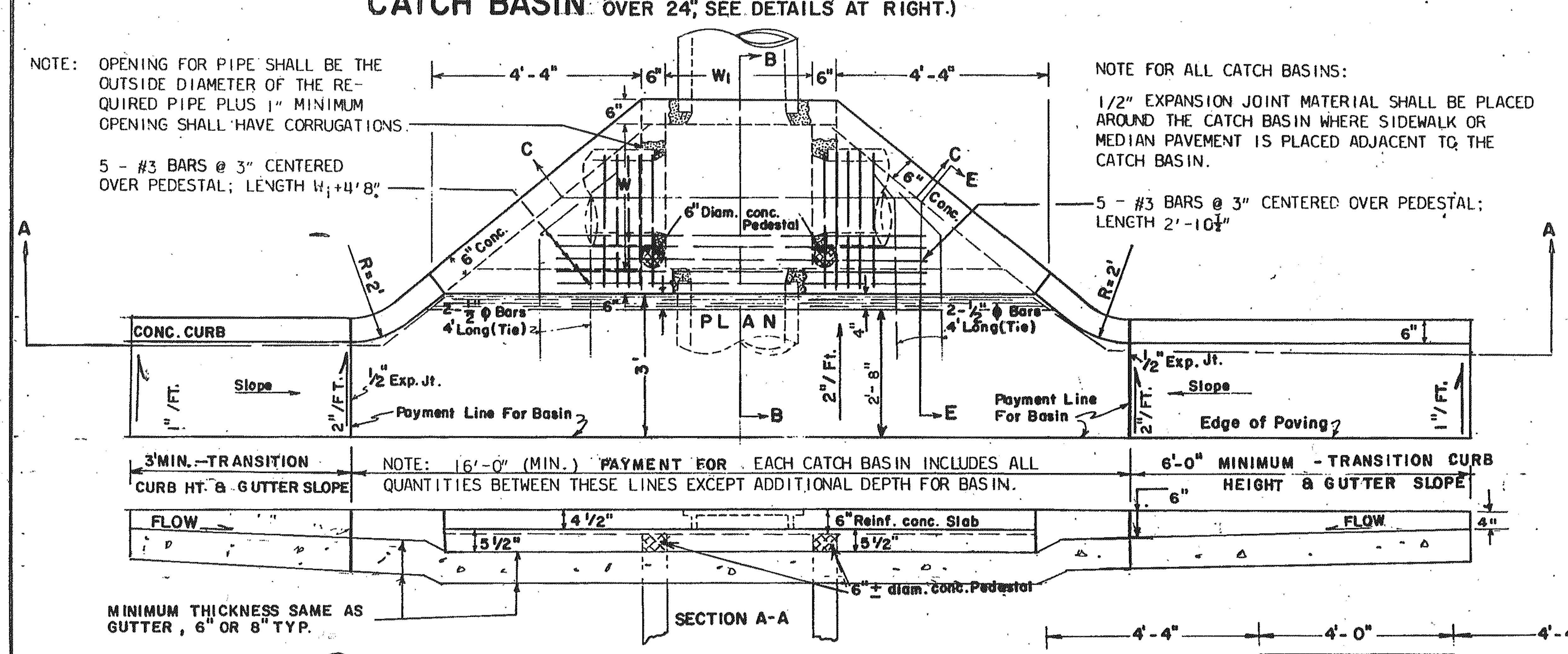

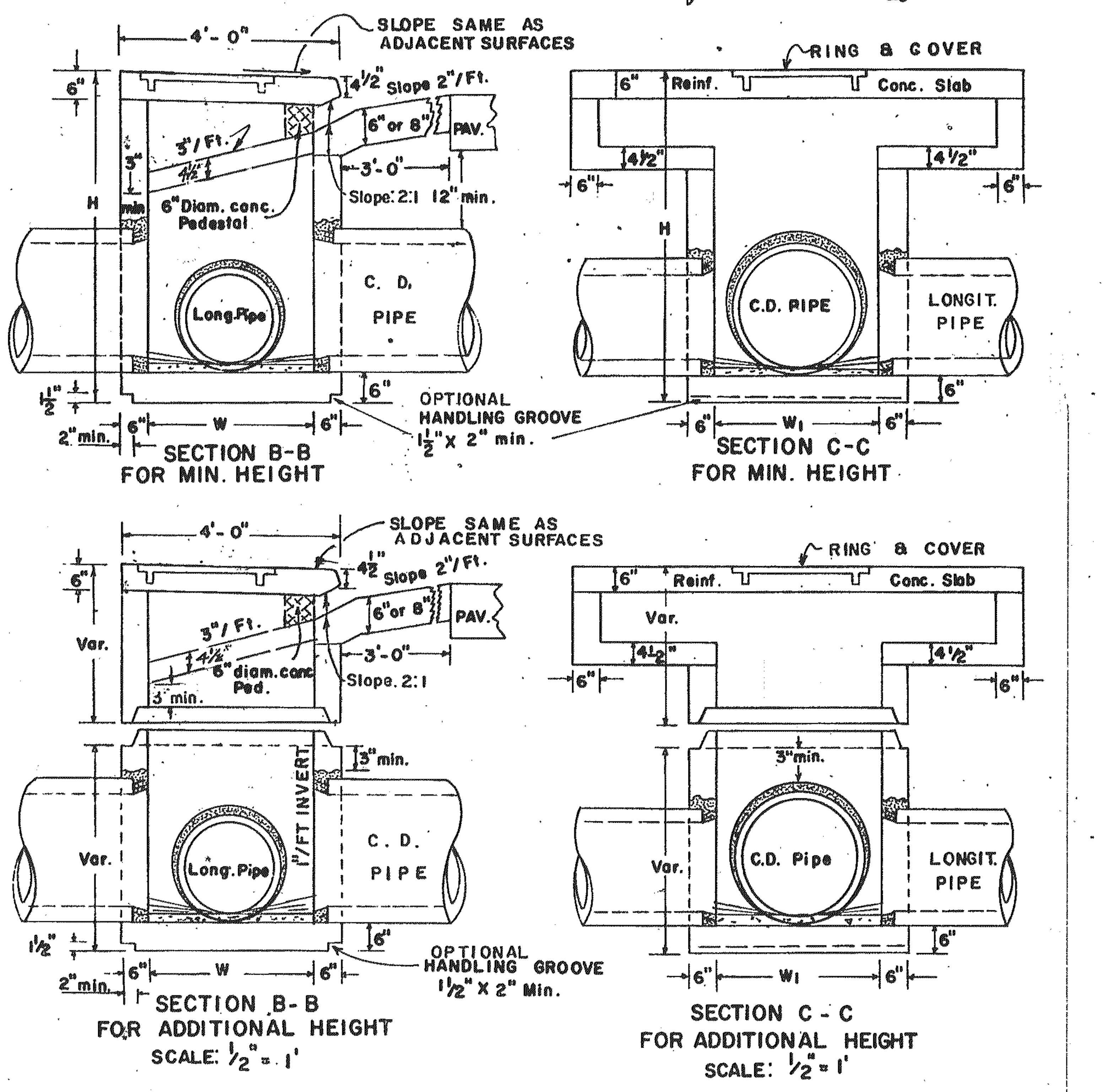

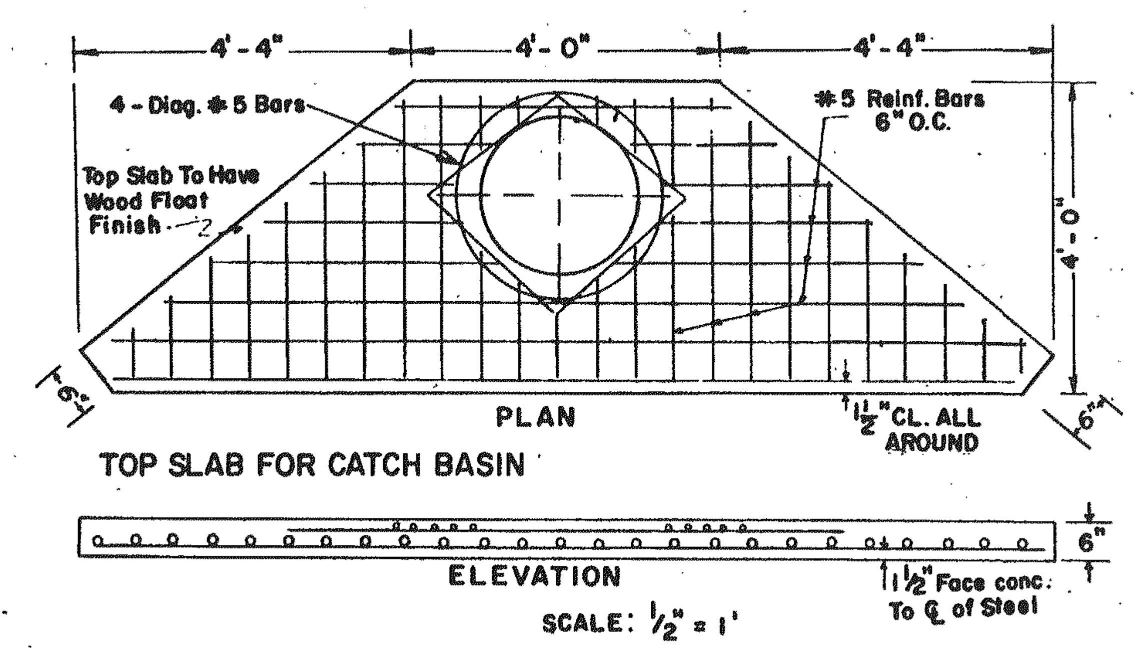

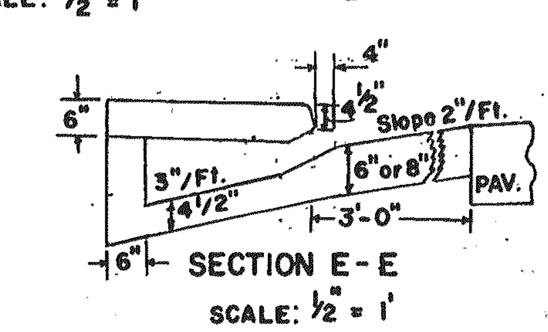

DETAIL AND ARRANGEMENT OF LADDER BARS

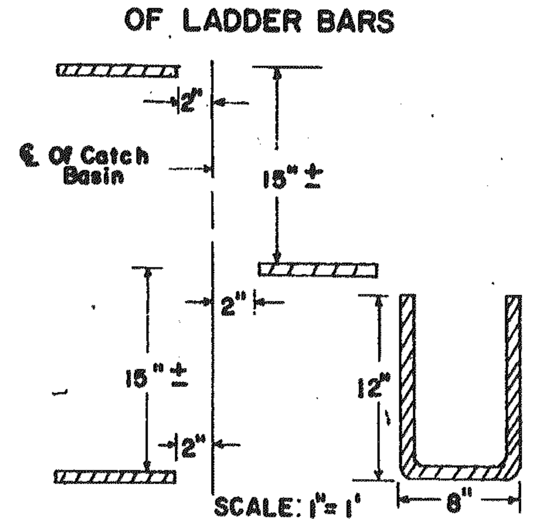

NOTE:

MIN. STEPS LISTED IN GA. D.O.T. LABORATORY'S QUALIFIED PRODUCTS LIST MAY BE SUBSTITUTED. ALL CATCH BASINS WILL HAVE STEPS OR LADDER BARS. NUMBER AND LOCATION OF LADDER BARS IN CATCH BASIN TO BE AS DIRECTED BY THE ENGINEER.

METHOD OF CONNECTING PIPE (WHERE CONC. PIPE HAS TO BE CUT)

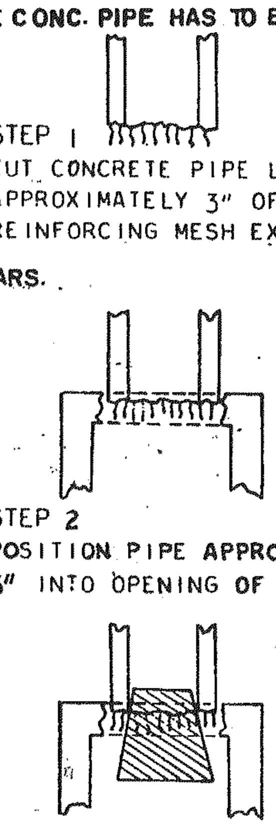

STEP 1 CUT CONCRETE PIPE LEAVING APPROXIMATELY 3" OF REINFORCING MESH EXPOSED.

STEP 2 POSITION PIPE APPROXIMATELY 3" INTO OPENING OF WALL.

STEP 3 POSITION CONICAL CORE INSIDE OF PIPE AND SEAL WITH GROUT (1/2" MIN THICKNESS OF GROUT). REMOVE CORE WHEN SET AND RUB GROUT TO SEAL JOINTS.

NO SCALE

DETAIL OF TOP SLAB, REINF. STEEL & CLEARANCES REQ'D

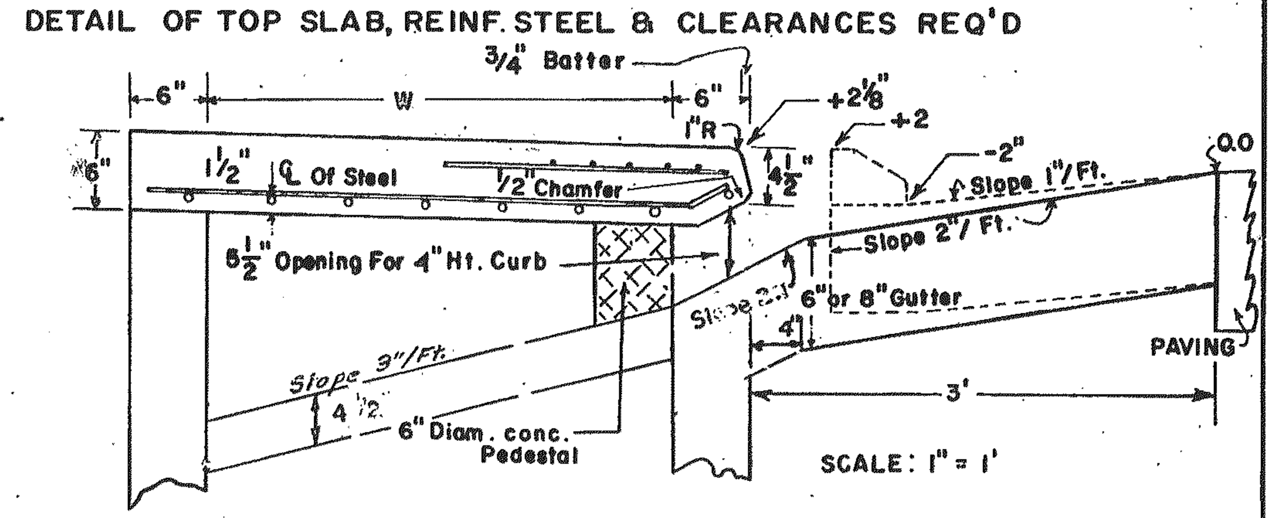

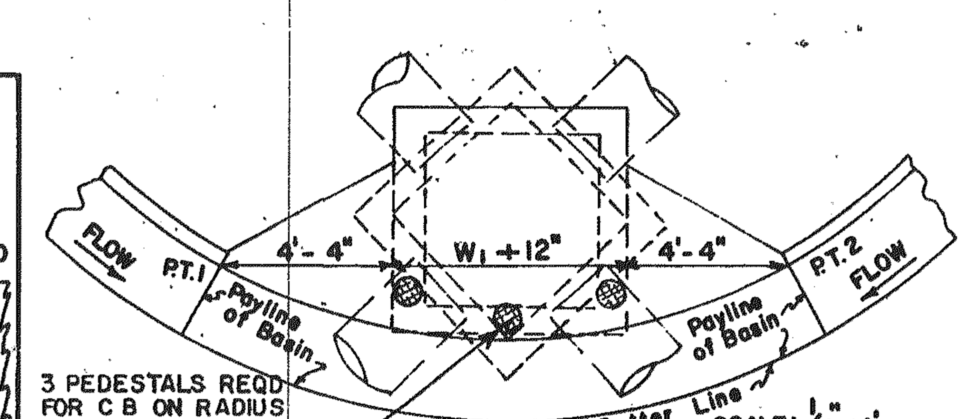

SWIVEL SECTION MAY BE USED WHERE SKEWED PIPE CONNECTS TO PRECAST CONCRETE BOX.
ALL DIMENSIONS ARE THE SAME AS SHOWN ON DETAILS FOR CATCH BASIN. DIMENSIONS FROM PT 1 TO PT 2 ARE MEASURED ALONG THE CHORD. UNIT PRICE BID FOR CATCH BASIN INCLUDES ALL CURB AND GUTTER FROM PT 1 TO PT 2.

CATCH BASIN (TYPICAL FOR CATCH BASIN WITH LONGITUDINAL PIPE OVER 24")

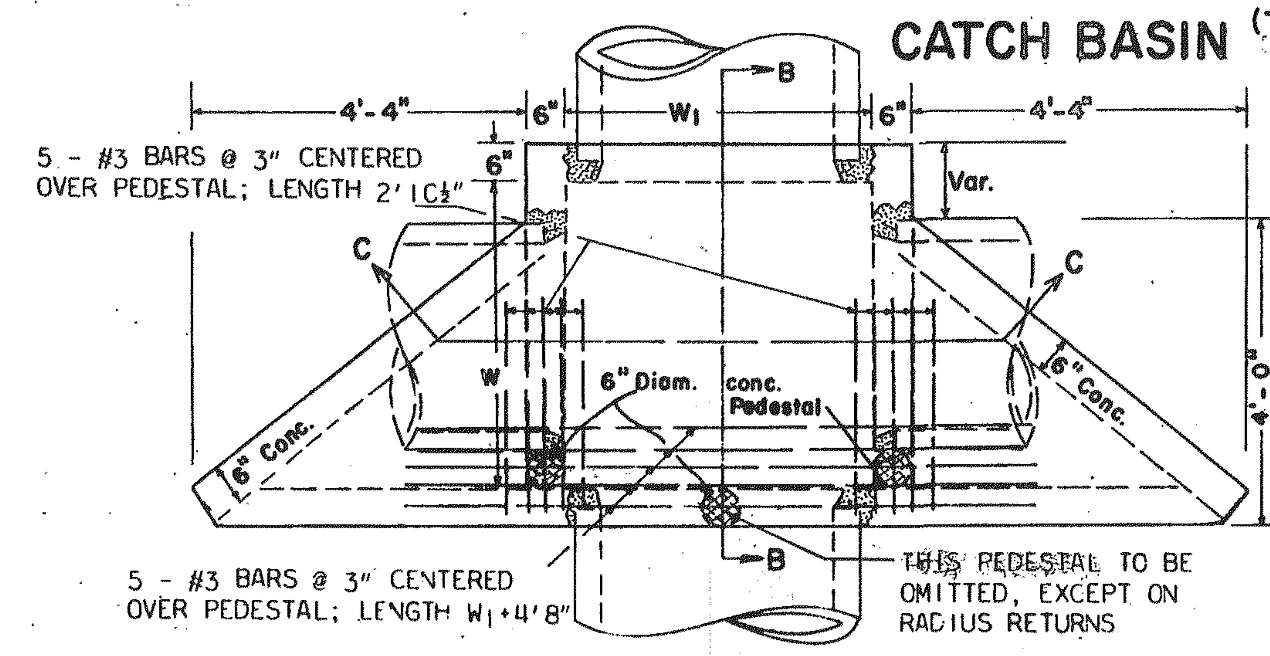

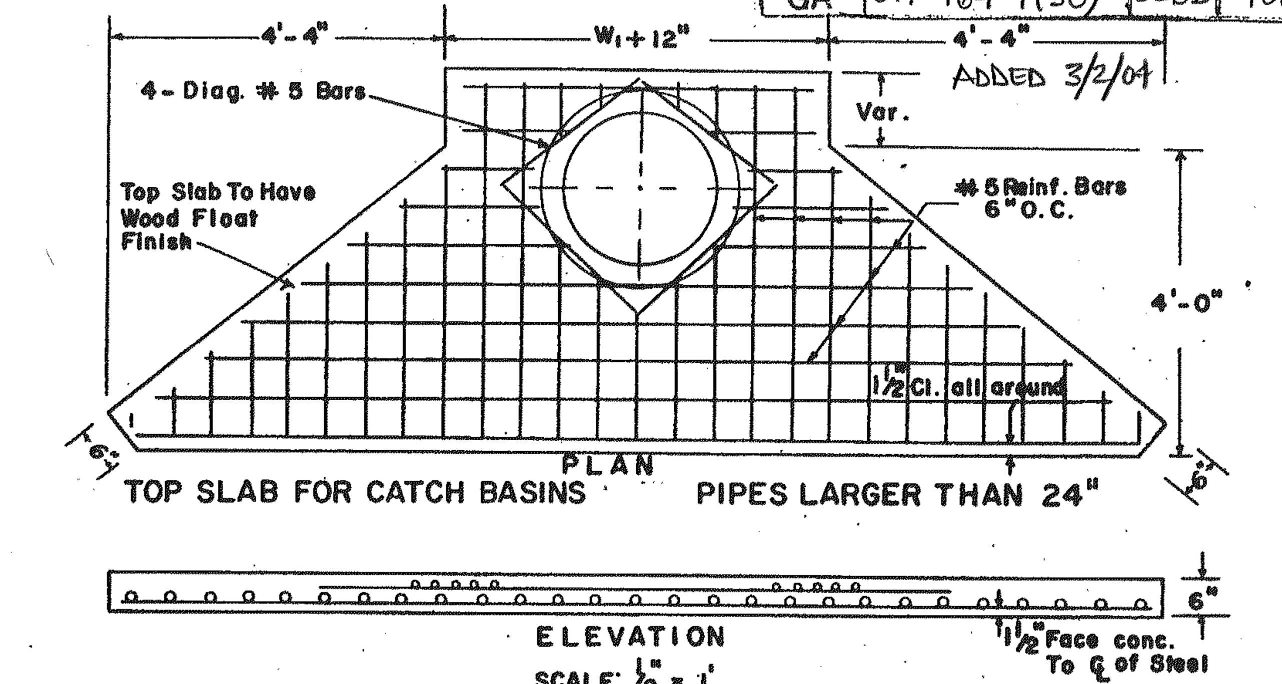

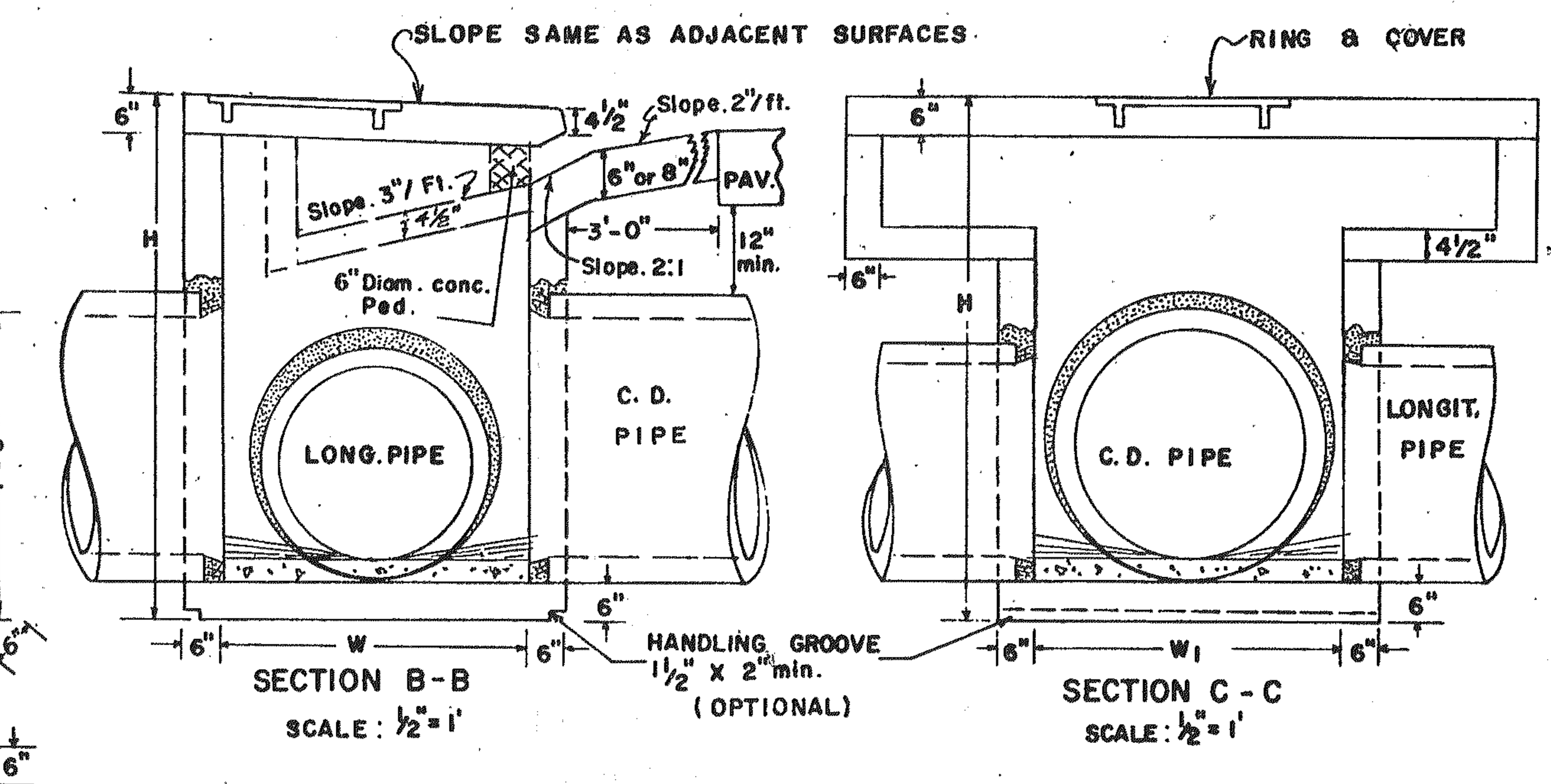

REINFORCING - ISOMETRIC VIEW

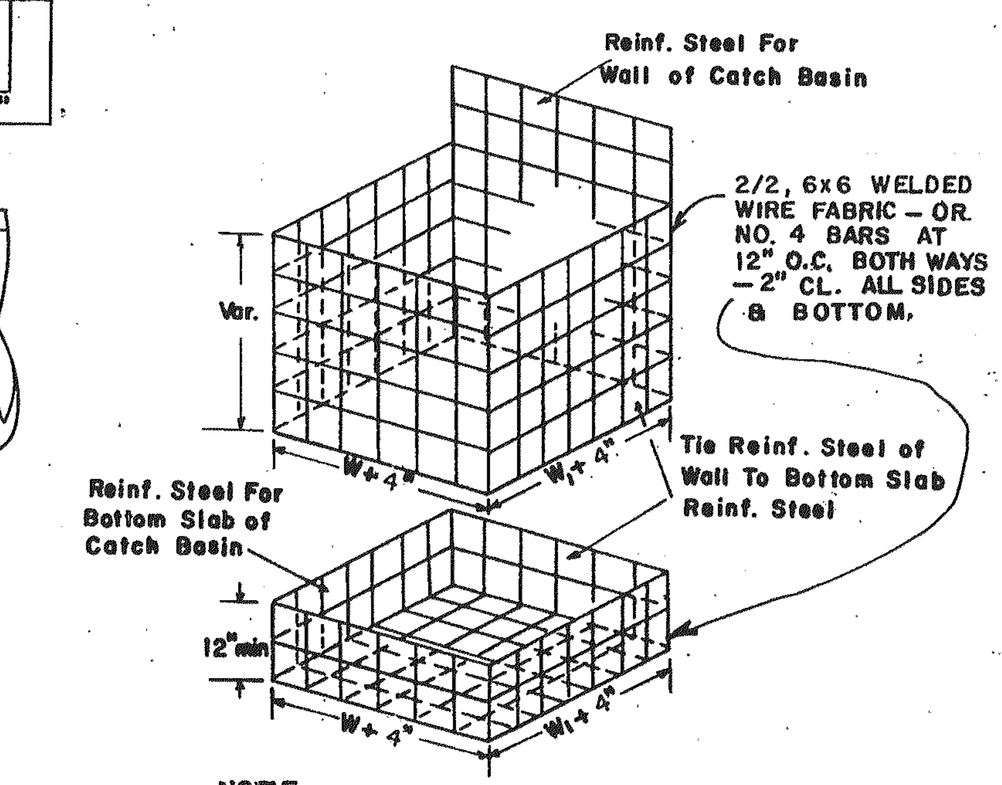

NOTE: REINFORCING SHOWN ABOVE IS REQUIRED FOR BOX SHAPED BASIN. REINFORCING FOR CIRCULAR PRECAST ALTERNATE SHALL BE ACCORDING TO STD. 1040.

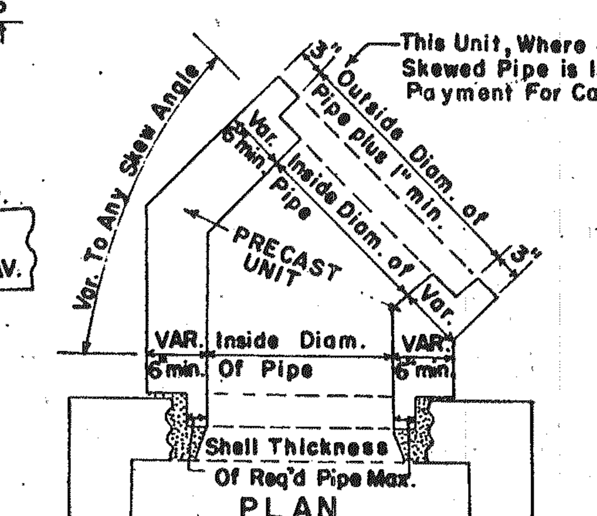

A METHOD OF CONNECTING SKEWED PIPE
(SEE SEPARATE STANDARDS FOR ALTERNATES)

IF THIS SWIVEL SECTION SLAB IS USED TO REDUCE THE W AND W_1 DIMENSIONS, INCREASE THE MINIMUM THICKNESS TO 9" AND USE REINF. STEEL. SEE DETAIL BELOW.

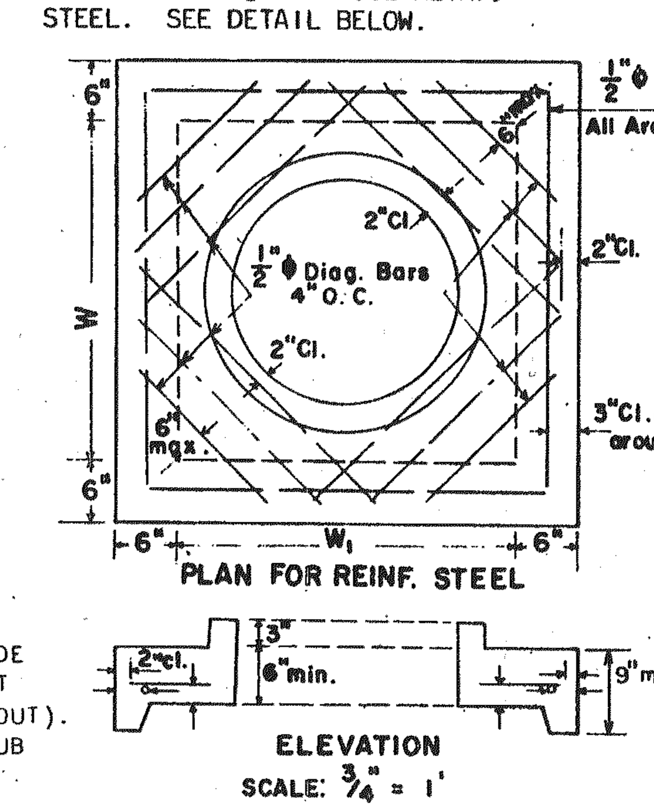

TYPICAL ISOMETRIC VIEW

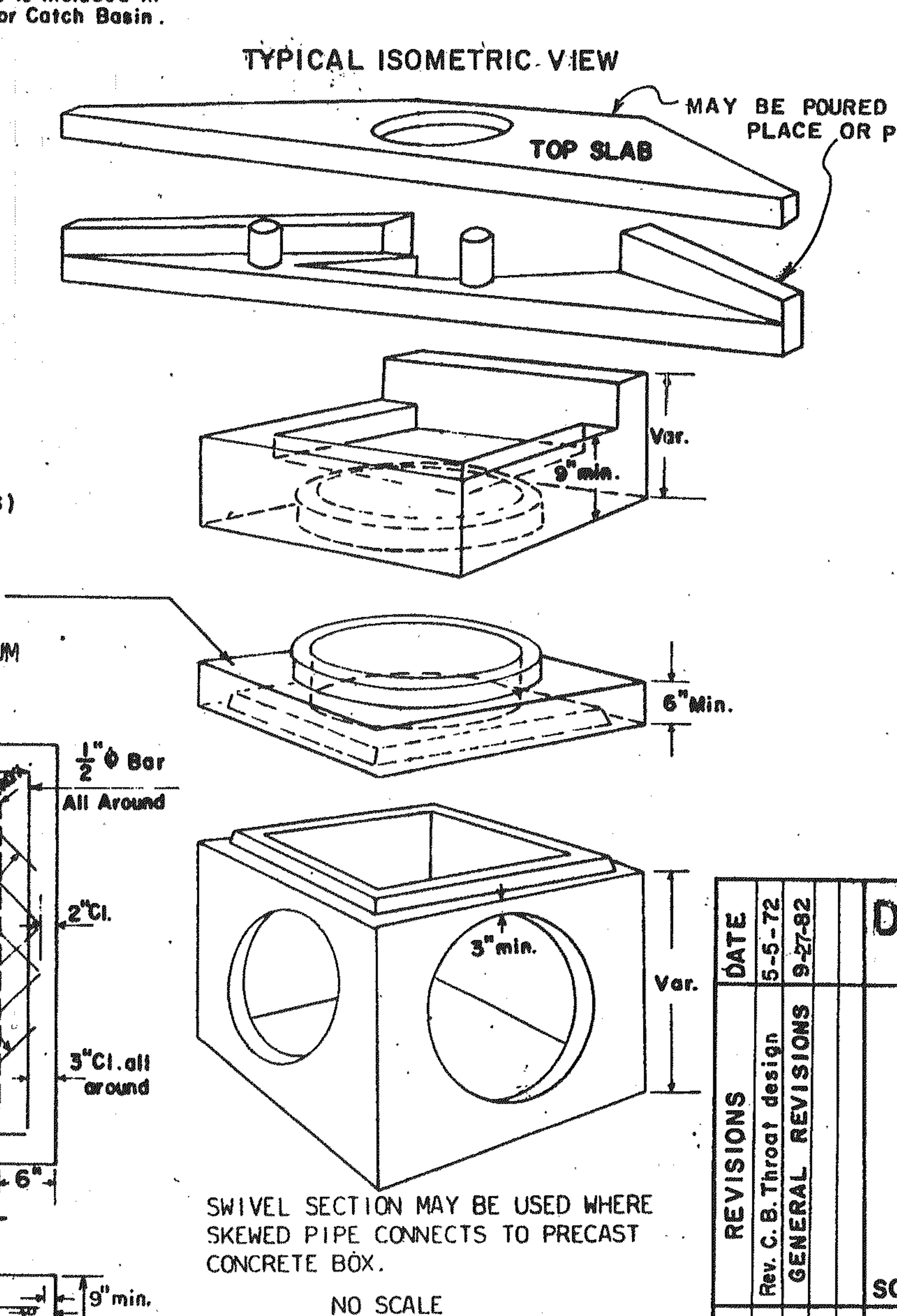

SWIVEL SECTION MAY BE USED WHERE SKEWED PIPE CONNECTS TO PRECAST CONCRETE BOX.

NO SCALE

NOTE: THE ABOVE VIEW DEPICTS PRECAST BOX. SEE SEPARATE STANDARDS FOR CIRCULAR ALTERNATE OR BUILT-IN-PLACE BOX.

ALL JOINTS BETWEEN PRECAST RISERS OR BETWEEN PRECAST BASE AND RISER WILL BE KEYED. KEYED JOINTS SHOWN ARE TYPICAL AND MAY BE VARIED.

DIMENSIONS FOR CATCH BASINS

PIPE SIZE	NORMAL W OR W_1	MIN.* H
12"	3'-0"	4'-4"
15"	3'-C"	4'-7"
18"	3'-C"	4'-10"
24"	3'-C"	5'-6"
3C"	3'-6"	6'-2"
36"	4'-C"	6'-10"
42"	5'-0"	7'-4"
48"	5'-0"	8'-0"
54"	6'-C"	8'-6"
60"	6'-C"	9'-2"

NOTE: DIMENSIONS FOR CATCH BASINS ARE BASED UPON TYPICAL OUTSIDE DIAMETERS OF CONCRETE PIPES AND MAY BE VARIED IF CONDITIONS PERMIT AND THE ENGINEER APPROVES. W & W_1 DIMENSIONS DO NOT HAVE TO BE EQUAL.

ALTERNATE: BUILT-IN-PLACE, PRECAST BOX, AND/OR PRECAST CIRCULAR UNITS WITH THE REQUIRED ADAPTERS, REDUCERS, FITTINGS, CONNECTIONS, ETC. MAY BE USED IN COMBINATIONS.

NOTE: FOR RING & COVER DETAILS AND OTHER DETAILS NOT SHOWN, SEE STANDARD 1034 E FOR BUILT-IN-PLACE CATCH BASIN.

REVISIONS	DATE	BY
Rev. C. B. Throat design	5-5-72	RMU
GENERAL REVISIONS	9-27-82	RMU

DEPARTMENT OF TRANSPORATION
STATE OF GEORGIA

STANDARD PRECAST CATCH BASINS
FOR USE WITH CURB (4" HT.) & GUTTER IN SAG OR LOW POINTS

SCALE AS SHOWN — FEB., 1967

DESIGNED ____
DRAWN RWH
TRACED AVS
CHECKED RBS

SUBMITTED [signature] STATE ROAD DESIGN ENGINEER
APPROVED [signature] STATE HIGHWAY ENGINEER

NUMBER 1034E PRECAST

Dietzgen N O 135 "Imperial"

3/5/2004 11:44:38 AM \\GDOT-DSN1\GOPLOT\OCF\go-8850_mylar.gcf msanders M:\322060\dgn\STP-164-1 (30)Final Plans\opt\apache\JavaWebApps\stds_dtls\files\gse1034ep.tif GO-RD3