STATE	PROJECT NUMBER	SHEET NO.	TOTAL SHEETS
G.A.	STP-164-1(30)	314	406

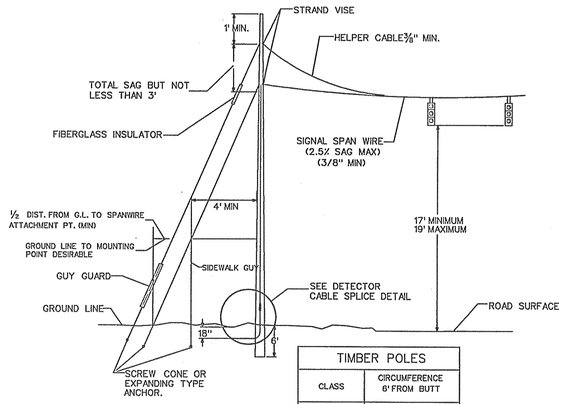

TIMBER POLES	
CLASS	CIRCUMFERENCE 6' FROM BUTT
I	41.0"
II	38.5"

TYP. TIMBER SIGNAL POLE DETAIL

SAG = .025 SPAN LENGTH
SPAN LENGTH = LONGEST DISTANCE BETWEEN ANY TWO SUPPORT POLES IN INSTALLATION.

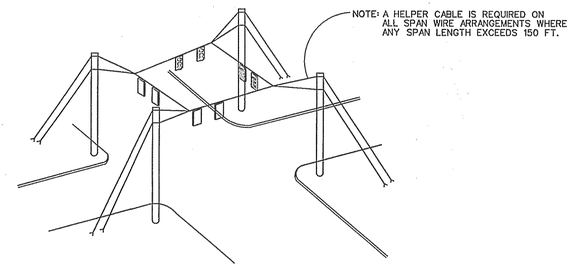

TYPICAL DETAIL "D"
SUSPENSION STRAND - PULL TOWARD POLE - LESS THAN 5 FEET

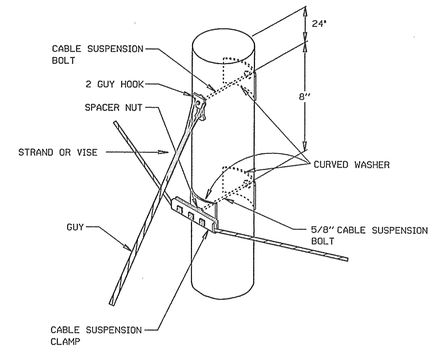

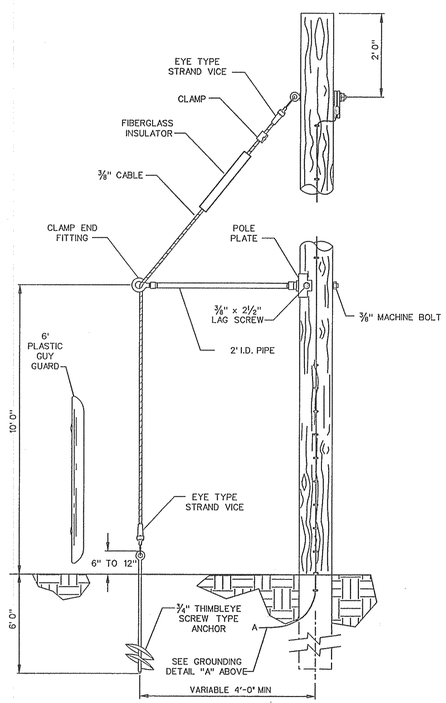

TYPICAL SIDEWALK GUY APPLICATION

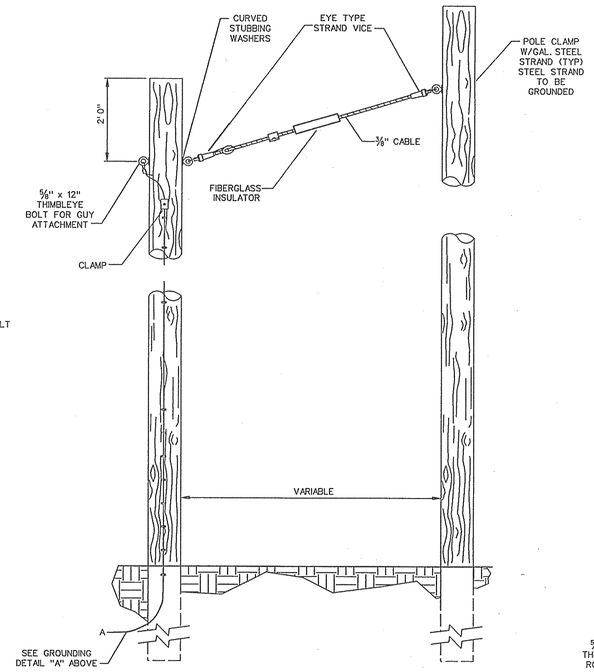

TYPICAL AERIAL GUY APPLICATION

GROUNDING DETAIL "A"
(REQUIRED AT EACH POLE LOCATION)

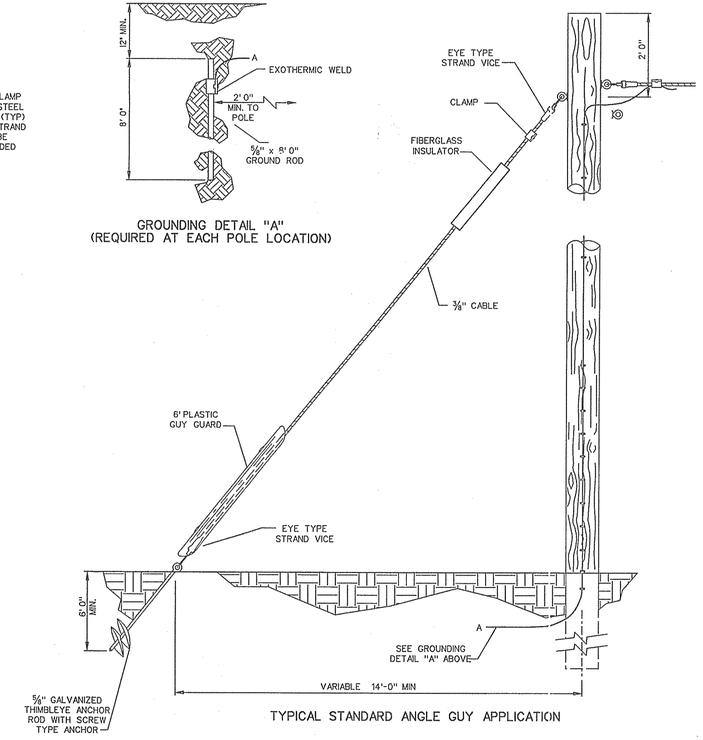

TYPICAL STANDARD ANGLE GUY APPLICATION

TYPICAL DETAIL "E"
SUSPENSION STRAND - PULL AWAY FROM POLE - 5 FEET OR MORE

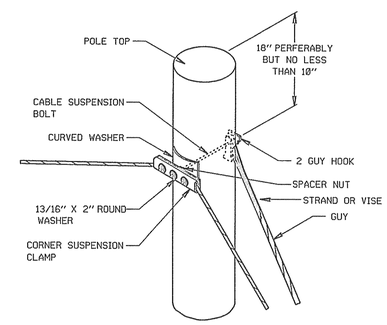

DATE	REVISIONS

GEORGIA DEPARTMENT OF TRANSPORTATION
OFFICE OF TRAFFIC SAFETY & DESIGN

STANDARD GUYING DETAILS

NO SCALE — DECEMBER 1998

PCBDTB
1/27/2004 2:49:51 PM \\GDOT-DSN1\GOPLOT\OCF\go_8850_mylar.pcf msanders C:\Matt's Stuff\MJS\opt\apache\jawebApps\stds_dtls\tl165\tl509.tlf GO-RD3
\\ga-dot-dsn1 - dwg\stds\dgn 10, 2003 15:20:23