STATE	PROJECT NUMBER	SHEET NO.	TOTAL SHEETS
GA	SPT00-7073-00(001)	2 G	21

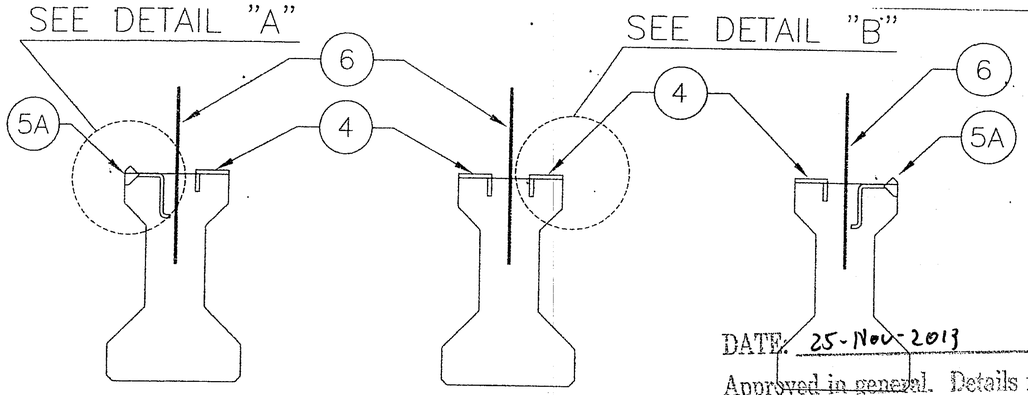

BEAM 1
MOD 1

BEAMS 2–6
MOD 1

BEAM 7
MOD 1

SECTION "A–A"

SPANS 1 THRU 5

SEE E1 SHEET FOR INTERPRETATION

DATE: 25-Nov-2013

Approved in general. Details not checked. This approval shall not relieve the Contractor of any responsibility for conformity with the contract Plans and Specifications.

Georgia DOT
Office of Bridge Design
By: SKG

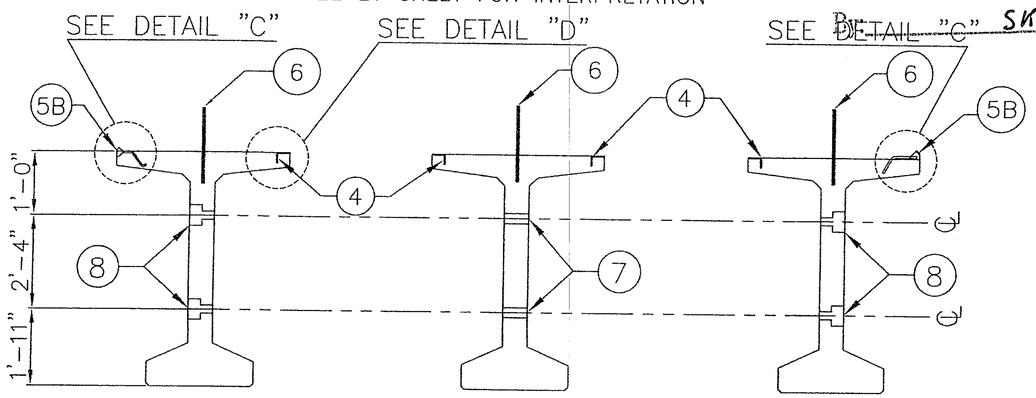

BEAM 1
BT–63

BEAM 2–6
BT–63

BEAM 7
BT–63

SECTION "B–B" THRU INTERIOR DIAPHRAGM

SPANS 6–8

SEE E1 SHEET FOR INTERPRETATION

TABLE OF INSERTS

SPAN	PIECE MARK	BEARING HOLE ①	BEARING SLOT ②	BEARING ANGLE ②	LIFTING LOOPS ③	DECK CLIPS ④	45° OVERHANG BRACKETS 5A	45° OVERHANG BRACKETS 5B	SAFETY BAR ⑥	3"ø DIAPH. HOLE ⑦	2"ø HOLE w/5"ø POCKET ⑧	HOLD DOWNS ⑨	EYE LOOPS ⑩
1	1–1.1	0	2	0	SEE BEAM DETAIL SHEETS	40	14	0	3	0	0	0	2
	1–1.2	0	2	0		80	0	0	3	0	0	0	2
	1–1.3	0	2	0		80	0	0	3	0	0	0	2
	1–1.4	0	2	0		80	0	0	3	0	0	0	2
	1–1.5	0	2	0		80	0	0	3	0	0	0	2
	1–1.6	0	2	0		80	0	0	3	0	0	0	2
	1–1.7	0	2	0		40	14	0	3	0	0	0	2
2	1–2.1	0	2	0		40	14	0	3	0	0	0	2
	1–2.2	0	2	0		80	0	0	3	0	0	0	2
	1–2.3	0	2	0		80	0	0	3	0	0	0	2
	1–2.4	0	2	0		80	0	0	3	0	0	0	2
	1–2.5	0	2	0		80	0	0	3	0	0	0	2
	1–2.6	0	2	0		80	0	0	3	0	0	0	2
	1–2.7	0	2	0		40	14	0	3	0	0	0	2
3	1–3.1	0	2	0		40	14	0	3	0	0	0	2
	1–3.2	0	2	0		80	0	0	3	0	0	0	2
	1–3.3	0	2	0		80	0	0	3	0	0	0	2
	1–3.4	0	2	0		80	0	0	3	0	0	0	2
	1–3.5	0	2	0		80	0	0	3	0	0	0	2
	1–3.6	0	2	0		80	0	0	3	0	0	0	2
	1–3.7	0	2	0		40	14	0	3	0	0	0	2
4	1–4.1	0	2	0		40	14	0	3	0	0	0	2
	1–4.2	0	2	0		80	0	0	3	0	0	0	2
	1–4.3	0	2	0		80	0	0	3	0	0	0	2
	1–4.4	0	2	0		80	0	0	3	0	0	0	2
	1–4.5	0	2	0		80	0	0	3	0	0	0	2
	1–4.6	0	2	0		80	0	0	3	0	0	0	2
	1–4.7	0	2	0		40	14	0	3	0	0	0	2
5	1–5.1	1	1	0		40	14	0	3	0	0	0	2
	1–5.2	1	1	0		80	0	0	3	0	0	0	2
	1–5.3	1	1	0		80	0	0	3	0	0	0	2
	1–5.4	1	1	0		80	0	0	3	0	0	0	2
	1–5.5	1	1	0		80	0	0	3	0	0	0	2
	1–5.6	1	1	0		80	0	0	3	0	0	0	2
	1–5.7	1	1	0		40	14	0	3	0	0	0	2
6	2–6.1	1	1	2		97	0	41	7	0	2	1	2
	2–6.2	1	1	2		194	0	0	7	2	0	1	2
	2–6.3	1	1	2		194	0	0	7	2	0	1	2
	2–6.4	1	1	2		194	0	0	7	2	0	1	2
	2–6.5	1	1	2		194	0	0	7	2	0	1	2
	2–6.6	1	1	2		194	0	0	7	2	0	1	2
	2–6.7	1	1	2		97	0	41	7	0	2	1	2
7	2–7.1	1	1	2		97	0	41	7	0	2	1	2
	2–7.2	1	1	2		194	0	0	7	2	0	1	2
	2–7.3	1	1	2		194	0	0	7	2	0	1	2
	2–7.4	1	1	2		194	0	0	7	2	0	1	2
	2–7.5	1	1	2		194	0	0	7	2	0	1	2
	2–7.6	1	1	2		194	0	0	7	2	0	1	2
	2–7.7	1	1	2		97	0	41	7	0	2	1	2
8	2–8.1	1	1	2		96	0	41	7	0	2	1	7
	2–8.2	1	1	2		192	0	0	7	2	0	1	2
	2–8.3	1	1	2		192	0	0	7	2	0	1	2
	2–8.4	1	1	2		192	0	0	7	2	0	1	2
	2–8.5	1	1	2		192	0	0	7	2	0	1	2
	2–8.6	1	1	2		192	0	0	7	2	0	1	2
	2–8.7	1	1	2		96	0	41	7	0	2	1	2

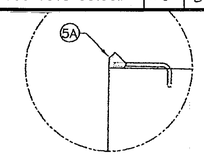

DETAIL "A"

MEDCO HF–31–05
OVERHANG INSERT @ 12"
OFF EACH END, THEN
@ 36"oc.

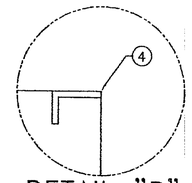

DETAIL "B"

TOPIKAL DECK CLIPS (12 GA)
INSERT @ 3" OFF EA. END
THEN @ 12"oc.
PLACE FLUSH WITH EDGE OF
TOP FLANGE

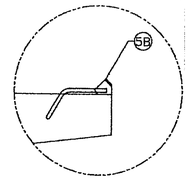

DETAIL "C"

MEDCO HF–31–03
OVERHANG INSERT @ 12"
OFF EACH END, THEN
@ 36"oc.

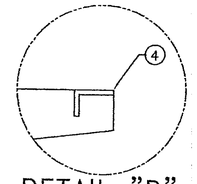

DETAIL "D"

TOPIKAL DECK CLIPS (12 GA)
INSERT @ 3" OFF EA. END
THEN @ 15"oc.
PLACE FLUSH WITH EDGE OF
TOP FLANGE

⑥ SAFETY BAR
BAR 801

PROJECTION = 18"
LENGTH = 36"
SIZE = #8
SPACING = 20'-0" O.C. (MAX.)
OFF EA END = 6'-0"

APPROVED ☐ **REVISE AND RESUBMIT**

SHOP DRAWING CORRECTIONS OR COMMENTS MADE DURING REVIEW DO NOT RELIEVE THE CONTRACTOR OF COMPLIANCE WITH DRAWING AND SPECIFICATION REQUIREMENTS. THIS CHECK ONLY REVIEWS GENERAL CONFORMITY WITH THE PROJECT DESIGN CONCEPT AND GENERAL COMPLIANCE WITH THE CONTRACT DOCUMENTS. CONTRACTOR'S PERFORMANCE DUTIES ARE STATED IN THE CONTRACT DOCUMENTS, AND ARE NOT MODIFIED BY THIS REVIEW OR COMMENTS MADE ON THESE SHOP DRAWINGS. THE CONTRACTOR IS RESPONSIBLE FOR VERIFICATION OF QUANTITIES AND DIMENSIONS, FABRICATION PROCESS SELECTION, CONSTRUCTION TECHNIQUES, AND WORK COORDINATION AND PERFORMANCE OF ALL TRADES.

BROWDER + LEQUIZAMON AND ASSOCIATES, INC.

DATE 11/21/13 BY PAL

DO NOT USE AS LIFT

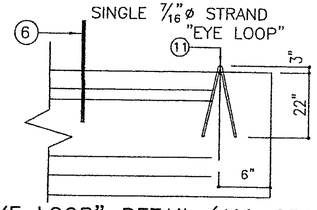

"EYE LOOP" DETAIL (ALL SPANS)

TYP. EACH END OF BEAM

2 EA. PER BM – SINGLE ½"ø STRAND "EYE LOOP"
EMBED 22" min.

① BEARING HOLE

2"ø O.D. x 7" DEEP HOLE

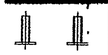

② BEARING SLOT

2"O.D. x 6" x 7" DEEP SLOT

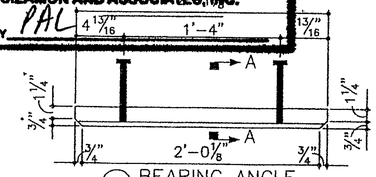

2B BEARING ANGLE

H.D. GALV. IN ACCORDANCE WITH ASTM A153. FOR USE AT BOTH BEAM ENDS IF BULB TEE. CASTING LENGTH IS BETWEEN 90'–0" & 130'–0".

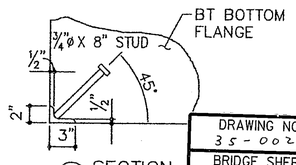

A SECTION

1. STUD WELDING SHALL CONFORM TO AWS 1.1 STANDARDS
2. ANGLE SHALL BE GRADE 36 STEEL CONFORMING TO ASTM A36

DRAWING NO. 35-0026
BRIDGE SHEET 26 OF 21

11-8-13
GEORGIA REGISTERED NO. 14890 PROFESSIONAL ENGINEER RICHARD C. POTTS

REV. No.	DATE	DETAILS
1		
2		

SCP STANDARD CONCRETE PRODUCTS
6 HATCHCOVER Rd
SAVANNAH, GA, 31404
TEL : (912) 233-8263
FAX : (912) 236-4689

SHEET DETAILS: ADDITIONAL BEAM DETAILS

CONTR./PROJ. No. SPT00–7073–00(001)

CONTRACTOR: ROGERS BRIDGE

COUNTY, STATE & PROJECT DETAILS: WILLIAM FEW PARKWAY OVER UCHEE CREEK
COLUMBIA CO., GEORGIA

DRAWN BY: VP | DESIGNED BY: GA DOT / BROWDER & LeGUIZAMON AND ASSOC. / SCP

DATE: 09/13/13 | CHECKED BY: FNS | JOB No. A01632 (411,46

SHEET N1 OF N1 | SCALE: NONE