VOID

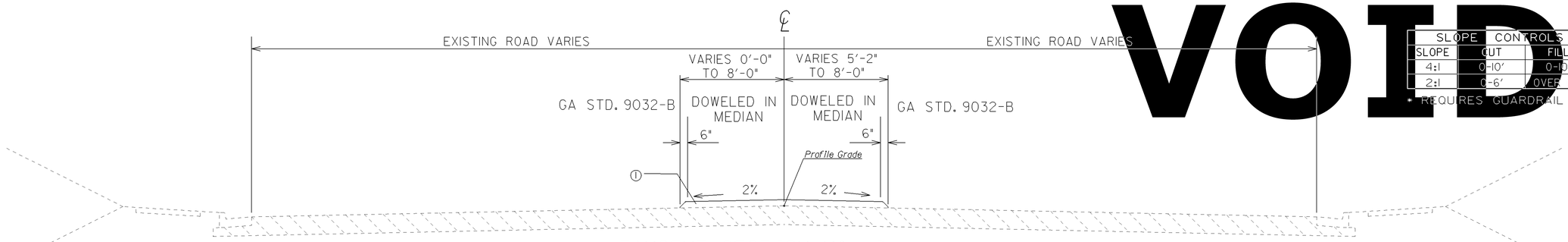

SLOPE CONTROLS		
SLOPE	CUT	FILL
4:1	0-10'	0-10'
2:1	0-6'	OVER 6'*

* REQUIRES GUARDRAIL

TANGENT SECTION NO. 6
APPLIES TO RIVERWATCH PARKWAY EXTENSION
STA. 247+55.26 TO STA. 258+89.00

REQUIRED PAVEMENT

Ⓐ RECYCLED ASPH CONC 12.5MM SUPERPAVE, GP 2 ONLY, INCL BITUM MATL & H LIME 165 LB/SY
Ⓑ RECYCLED ASPH CONC 19MM SUPERPAVE, GP 1 OR 2 INCL BITUM MATL & H LIME 220 LB/SY
Ⓒ RECYCLED ASPH CONC 25MM SUPERPAVE, GP 1 OR 2, INCL BITUM MATL & H LIME 440 LB/SY
Ⓓ GR AGGR BASE CRS, INCL MATL 14 INCH
Ⓔ RECYCLED ASPH CONC LEVELING, INCL BITUM MATL & H LIME (AS REQ'D)
Ⓕ MILL ASPH CONC PVMT, VARIABLE DEPTH
Ⓖ CONC CURB & GUTTER, 8 IN X 30 IN, TP2 GA. STD. 9032 B
Ⓗ CONC SIDEWALK, 4 IN 5'-0"
Ⓘ CONCRETE MEDIAN, 6 IN (INTEGRAL) WITH TIE BARS TP7 CURB FACE GA. STD. 9032 B
Ⓙ PVMT REINF FABRIC STRIPS, TP 2, 18 INCH WIDTH

ALTERNATE CONCRETE PAVEMENT

Ⓚ PLAIN PC CONC PVMT, CL 3 CONC, 9 INCH THK
Ⓛ GR AGGR BASE CRS, INCL MATL 8 INCH

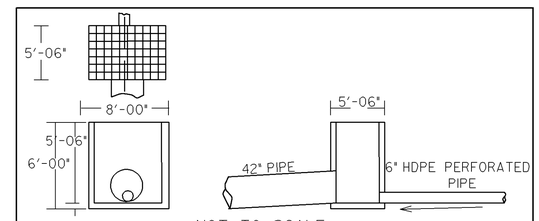

NOT TO SCALE
SPECIAL DESIGN DITCH DROP INLET

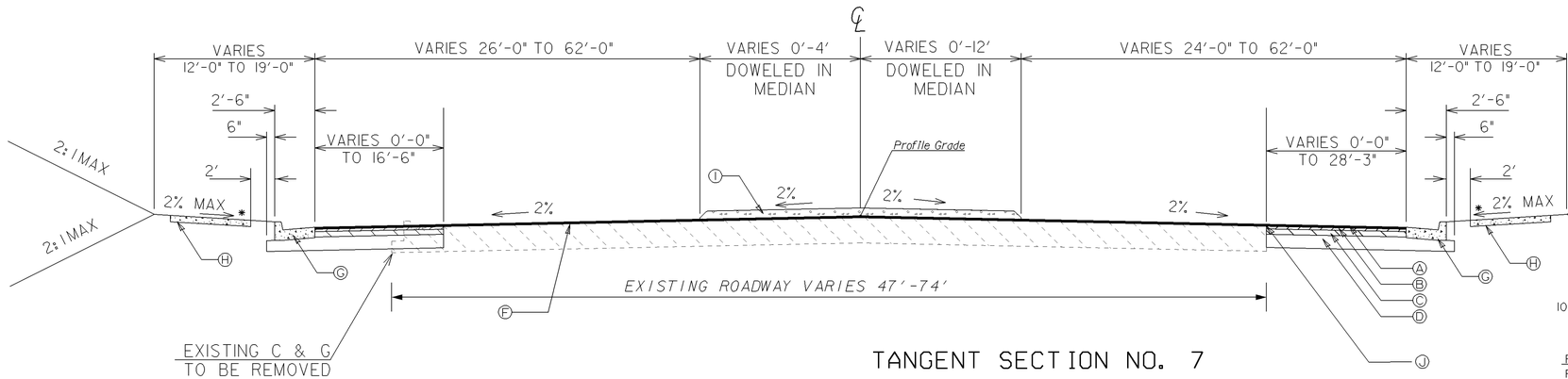

TANGENT SECTION NO. 7
APPLIES TO WASHINGTON ROAD / SR 104
STA. 13+33.85 TO STA. 37+72.00

NOTE: MILL WHERE REQUIRED TO PROVIDE SMOOTH TIE-IN.

*SEE PLAN SHEETS 14-001 THRU 14-007 FOR LOCATION OF SIDEWALK.

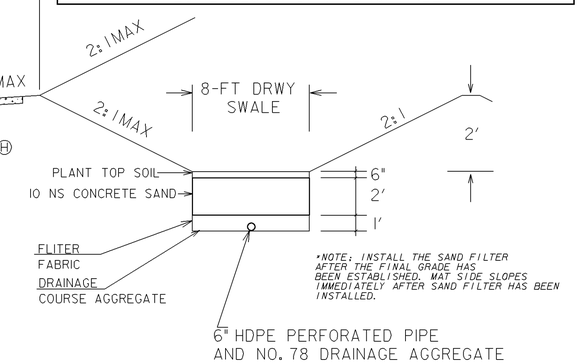

*SWALE BEGINS AT STA. 33+00.00 AND ENDS AT STA. 31+80.00

				REVISION DATES	STATE OF GEORGIA DEPARTMENT OF TRANSPORTATION
		GEORGIA DEPARTMENT OF TRANSPORTATION	NOT TO SCALE		OFFICE: ROADWAY DESIGN
					TYPICAL SECTIONS
					RIVERWATCH PARKWAY EXTENSION — DRAWING NO. 05-003

1/5/2009 GPLN