STATE	PROJECT NUMBER	SHEET NO.	TOTAL SHEETS
GA.			

FRAME

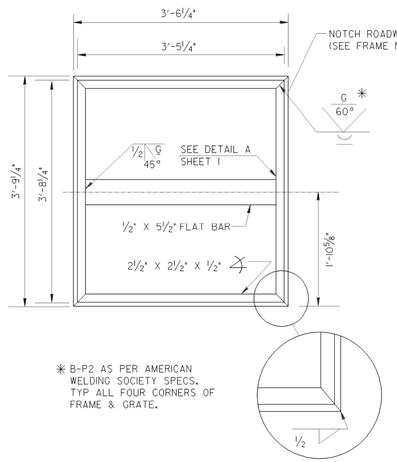

GRATE

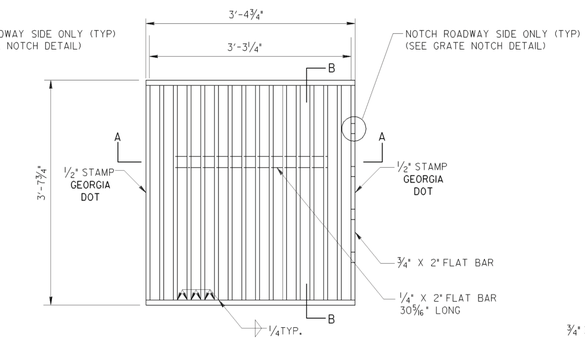

SECTION B-B

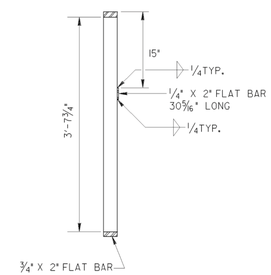

FRAME NOTCH DETAIL

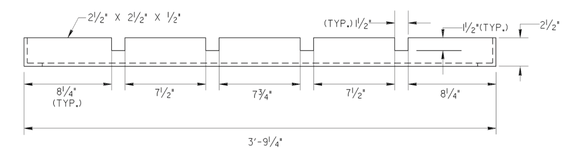

GRATE NOTCH DETAIL

¾" X 2" FLAT BAR (ONE REQ'D)

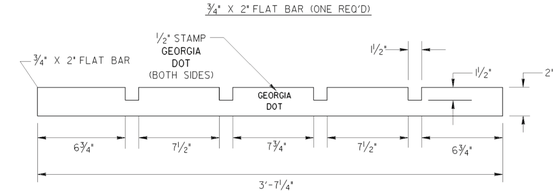

SECTION A-A

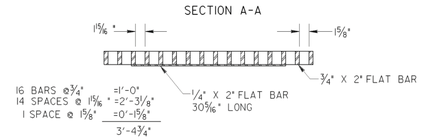

SECURITY CHAIN

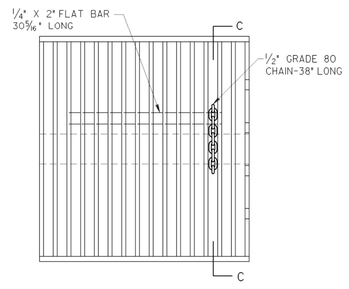

PLAN

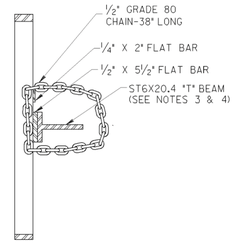

SECTION C-C

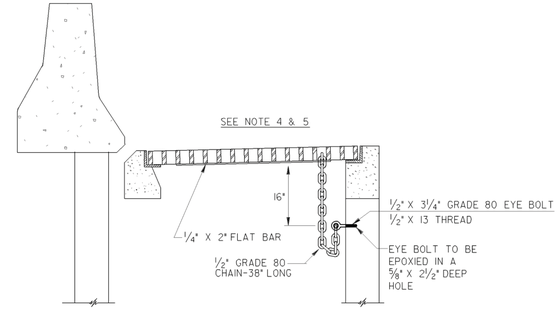

GENERAL NOTES:

1. SPECIFICATION: GEORGIA STANDARD CURRENT EDITION, AND SUPPLEMENTS THERETO.
2. NO SEPARATE MEASUREMENT OR PAYMENT SHALL BE MADE FOR THE FABRICATION AND INSTALLATION OF THE SECURITY CHAIN.
3. LOOP CHAIN AROUND FIRST LADDER STEP IF ST6X20.4 "T" BEAM IS NOT PRESENT.
4. IF NEITHER ST6X20.4 "T" BEAM OR STEP IS AVAILABLE, THEN SECURE CHAIN TO INLET WITH EYE BOLT.
5. WELD NUT TO THE BOLT, IF CHAIN IS SECURED TO INLET OR GRATE WITH BOLT AND NUT.

CHAIN LOOP CONNECTION DETAILS

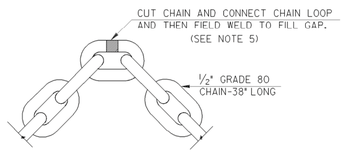

CHAIN LOOP CONNECTION DETAIL

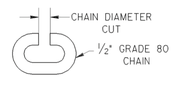

CUT CHAIN LINK DETAIL

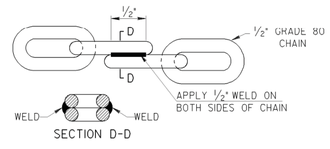

SECTION D-D

ALTERNATE WELDED CONNECTION DETAIL

B.J.O.	REV. CHAIN GRADE & DETAILS	2-8-14	
C.L.C.	ADDED GEN. NOTES 3, 4, & 5	6-11-10	
C.L.P.	ADDED CHAIN DETAILS	6-30-98	
R.M.J.	REDRAWN	8-6-97	
R.M.J.	ADD SPECIAL NOTE	9-9-94	
R.M.J.	ADD NOTE 6	9-9-94	
BY:	REVISION	DATE	

DEPARTMENT OF TRANSPORTATION
STATE OF GEORGIA

STANDARD
DROP INLET TYPES M-1 & M-2
ADJACENT TO CONCRETE BARRIER

NO SCALE — MAY 1996

DES. W.W.S.
DRW. L.G.S.
TRA. R.M.J.
CHK. R.K.C.

(SUBMITTED) STATE DESIGN POLICY ENGINEER
(APPROVED) CHIEF ENGINEER

NUMBER 5001M
SHEET 2 OF 2

REVISION DATES		

STATE OF GEORGIA
DEPARTMENT OF TRANSPORTATION
OFFICE: INNOVATIVE PROGRAM DELIVERY
GEORGIA STANDARDS

DRAWING No. 41-021