| FED. ROAD DIV. NO. | STATE | FED. AID PROJ. NO. | STATE AID PROJ. NO. | FISCAL YEAR | SHEET NO. | TOTAL SHEETS |
|---|---|---|---|---|---|---|
| 3 | GA. | | | | | |

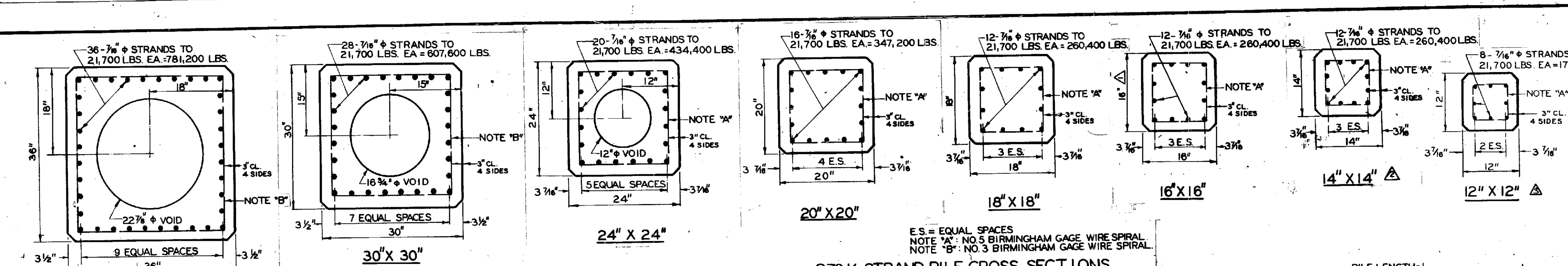


E.S.= EQUAL SPACES
NOTE "A": NO.5 BIRMINGHAM GAGE WIRE SPIRAL.
NOTE "B": NO.3 BIRMINGHAM GAGE WIRE SPIRAL.

## 270 K STRAND PILE CROSS SECTIONS
SCALE: 1"=1'-0"

| PILE SIZE | AREA IN² | WEIGHT LBS/FT. | S IN³ | N P.S.I. | PICK-UP POINTS MAX. L: END | 0.293 L | 0.207 L | 0.153 L | PILE LENGTH (L)/BOLSTER SPACING (B.S.) IN FEET: 25 | 30 | 35 | 40 | 45 | 50 | 55 | 60 | 65 | 70 | 75 | 80 | 85 | 90 * | 95 |
|---|---|---|---|---|---|---|---|---|---|---|---|---|---|---|---|---|---|---|---|---|---|---|---|
| 12 X 12 | 144.00 | 150 | 288.00 | 940 | 28' | 49' | 70' | 95' | 13-25 | 16-28 | 21-29 | 26-30 | 30-33 | 35 | --- | --- | --- | --- | --- | --- | --- | --- | --- |
| 14 X 14 | 196.00 | 204 | 457.33 | 1036 | 30' | 52' | 73' | 100' | 16-25 | 19-30 | 22-31 | 25-32 | 30-34 | 35-36 | --- | --- | --- | --- | --- | --- | --- | --- | --- |
| 16 X 16 | 256.00 | 287 | 682.67 | 793 | 34' | 58' | 83' | 112' | 16-25 | 19-30 | 22-34 | 25-35 | 29-36 | 33-38 | 38-40 | --- | --- | --- | --- | --- | --- | --- | --- |
| 18 X 18 | 324.00 | 338 | 972.00 | 627 | 33' | 57' | 80' | 109' | 16-25 | 19-30 | 22-33 | 25-34 | 29-35 | 34-37 | 39 | --- | --- | --- | --- | --- | --- | --- | --- |
| 20 X 20 | 400.00 | 417 | 1333.33 | 677 | 36' | 61' | 87' | 118' | 16-25 | 19-30 | 22-35 | 25-36 | 29-37 | 32-39 | 37-41 | 42-43 | --- | --- | --- | --- | --- | --- | --- |
| 24 X 24 | 462.90 | 483 | 2219.17 | 731 | 44' | 76' | 107' | 146' | 16-25 | 19-30 | 22-35 | 25-40 | 29-44 | 32-45 | 35-46 | 38-47 | 43-49 | 48-51 | 53 | --- | --- | --- | --- |
| ** | 576.00 | 600 | 2304.00 | 588 | 37' | 64' | 91' | 123' | 16-25 | 19-30 | 22-35 | 25-37 | 29-38 | 32-40 | 37-42 | 42-44 | --- | --- | --- | --- | --- | --- | --- |
| 30 X 30 | 679[illegible] | 708 | 4242.40 | 697 | 50' | 85' | 121' | 164' | 16-25 | 19-30 | 22-35 | 25-40 | 29-45 | 32-50 | 35-50 | 38-51 | 41-53 | 45-54 | 50-56 | 55-58 | 60 | --- | --- |
| 36 X 36 | 885.03 | 922 | 7029.31 | 689 | 56' | 96' | 136' | 184' | 16-25 | 19-30 | 22-35 | 25-40 | 29-45 | 32-50 | 35-55 | 38-56 | 41-57 | 44-58 | 47-60 | 52-61 | 57-63 | 62-65 | 67-68 |

L column: B.S.

N= EFFECTIVE PRESTRESS. VALUES GIVEN IN THIS TABLE APPLY ONLY TO PILE SECTIONS USING 270K STRANDS.
** VALUES GIVEN ARE FOR 24" SQ. SOLID PILE WITH SAME NUMBER OF STRANDS, STRAND ARRANGEMENT AND INITIAL PRETENSION FORCE AS REQ'D. FOR 24" SQ. WITH 12" Φ VOID PILE.

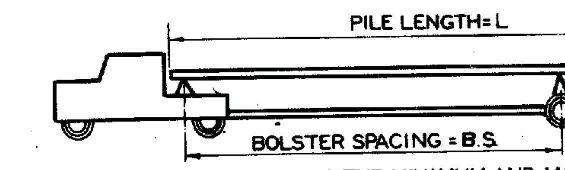


FOR A GIVEN PILE LENGTH "L", THE MINIMUM AND MAXIMUM BOLSTER SPACINGS ARE TABULATED ASSUMING ONLY ONE OVERHANG. WHEN LONGER PILES ARE INVOLVED, HAULING WILL BE LIMITED AS FOLLOWS:

1. UNEQUAL OVERHANGS
THE MAXIMUM PERMITTED PILE LENGTH SHALL BE EQUAL TO TWICE THE [TABULATED PILE LENGTH MINUS BOLSTER SPACING] PLUS THE BOLSTER SPACING USED IN THIS EQUATION. THE MAXIMUM OVERHANG SHALL BE 0.293 TIMES THE LENGTH TABULATED IN THE COLUMN HEADED "0.293 L".
*EXAMPLE: FOR 36" PILE [90-62][2] + 62=118', BOLSTER SPACING = 62'
MAXIMUM OVERHANG = 0.293 X 96' = 28.1'

2. EQUAL OVERHANGS
THE MAXIMUM PERMITTED PILE LENGTH SHALL BE BASED UPON THE DOUBLE POINT PICK-UP SYSTEM AND THE BOLSTER SPACING SHALL BE EQUAL TO 0.586L. THE MAXIMUM PILE LENGTH HAULED SHALL BE THAT TABULATED IN THE COLUMN HEADED "0.207 L"
EXAMPLE: FOR 36" PILE 135' LONG
EACH OVERHANG 0.207 X 135' = 27.945'
B.S. 0.586 X 135' = 79.11'
MAXIMUM LENGTH = 136' > 135'

## HAULING DIAGRAM
NO SCALE

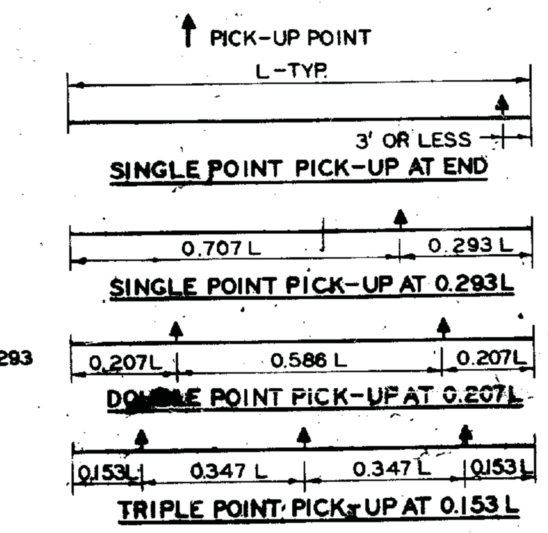


## PICK-UP SKETCHES
NO SCALE

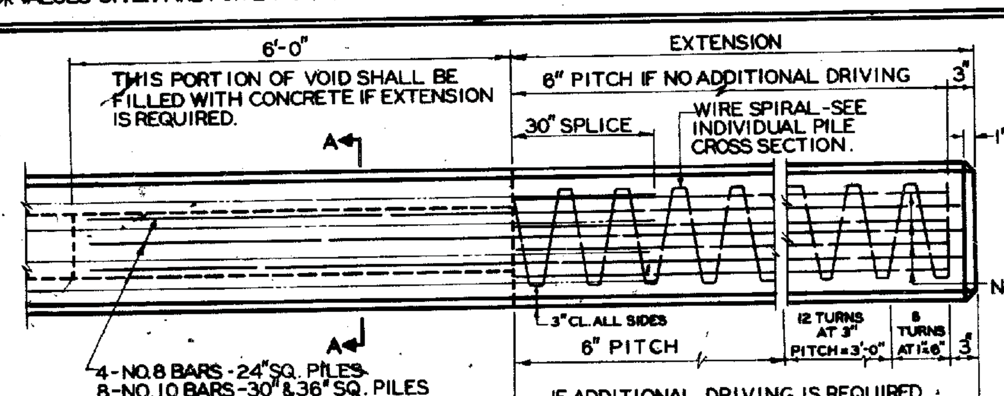


## 24" SQ. THRU 36" SQ. PILE EXTENSION
NO SCALE

FOR 24" SQ. SOLID PILE, HOLES FOR NO.8 BARS SHALL BE DRILLED 24" INTO PRESTRESSED CONCRETE AND BARS DEVELOPED WITH AN APPROVED EPOXY BONDING COMPOUND.

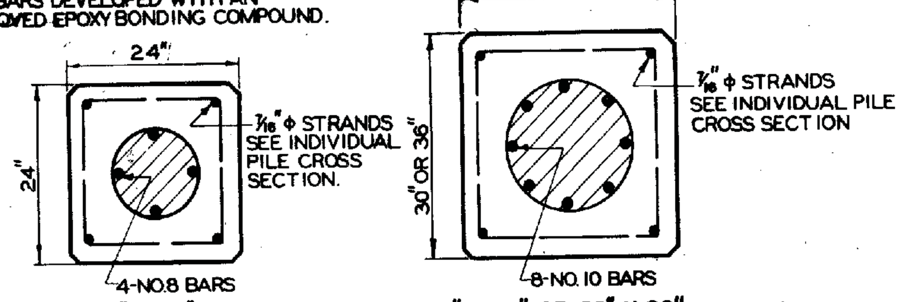


## SECTION A-A
NO SCALE

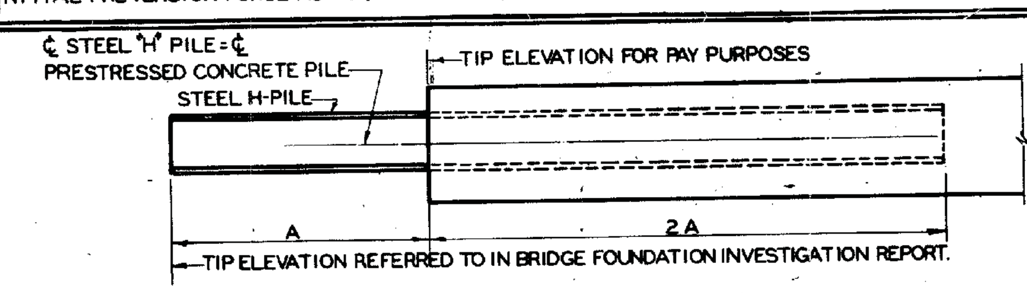


TO BE USED WHEN REQUIRED BY SPECIAL PLANS. TEST PILE LENGTHS GIVEN ON SPECIAL PLANS DO NOT INCLUDE STEEL H-PILE IN TIP OF COMPOSITE PILES.

## COMPOSITE PILE DETAILS
NO SCALE

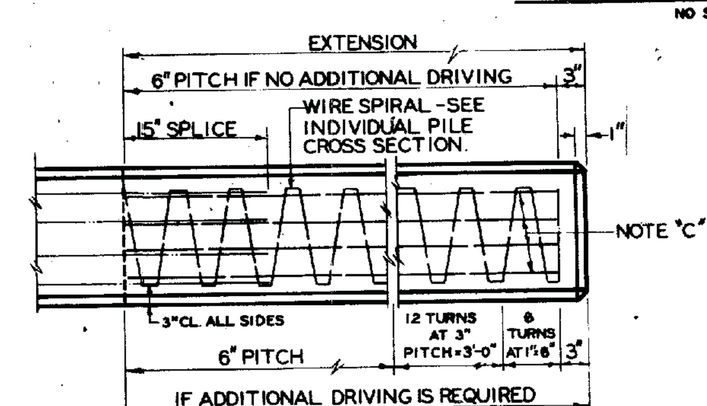


## 14" SQ. THRU 20" SQ. PILE EXTENSION
NO SCALE

VOIDS SHALL BE LOCATED WITHIN ½" OF POSITION SHOWN.

NOTE C: NO. 5 BARS FOR PILES 12" THRU 24". NO.6 BARS FOR 30" & 36" PILES. PLACE ONE BAR AT EACH PRETENSIONED STRAND. SEE INDIVIDUAL PILE CROSS SECTION FOR NUMBER OF STRANDS.

NOTE: 1" Φ HOLES SHALL BE FORMED IN ONE FACE (AT 5 FT. ON CENTER) IN VOID-TYPE PILE. IN PILING CAST FOR A SPECIFIC PROJECT, THESE HOLES WILL BE REQUIRED ONLY FOR THAT PORTION EXPECTED TO REMAIN ABOVE GROUND.

## GENERAL DETAILS
## 250K OR 270K PILING

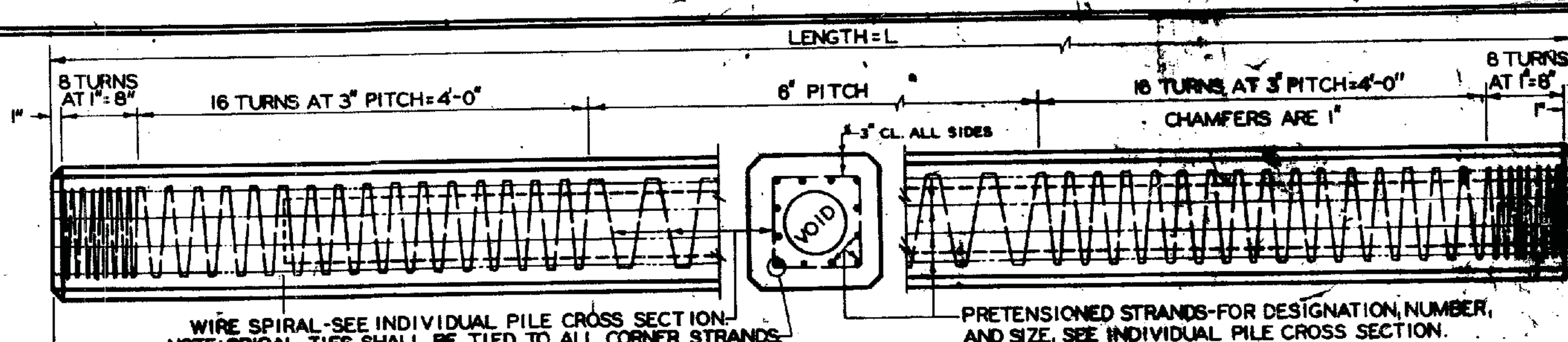


HOLLOW PILE SHOWN-SOLID PILE SAME, EXCEPT FOR VOID

## TYPICAL PILE DETAILS
NO SCALE

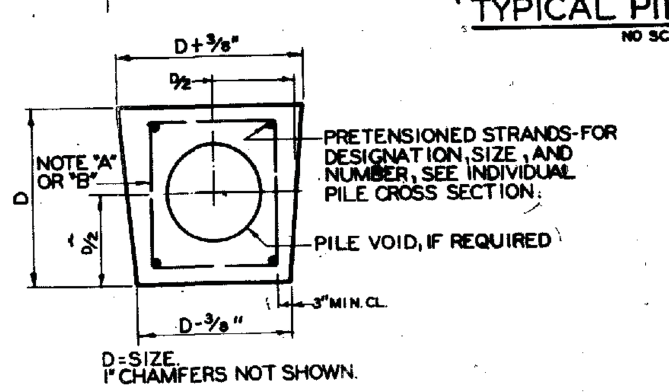


D=SIZE.
1" CHAMFERS NOT SHOWN.

## ALTERNATE PILE CROSS SECTION
NO SCALE

## DESIGN DATA

CONCRETE.....5,000 P.S.I.-CLASS AAA
PRETENSIONED STRANDS.....250K OR 270K
TOTAL LOSSES.....22 % OF INITIAL PRETENSION FORCE
WIRE SPIRALS.....A.S.T.M. A82 OR A.A.S.H.O. M32

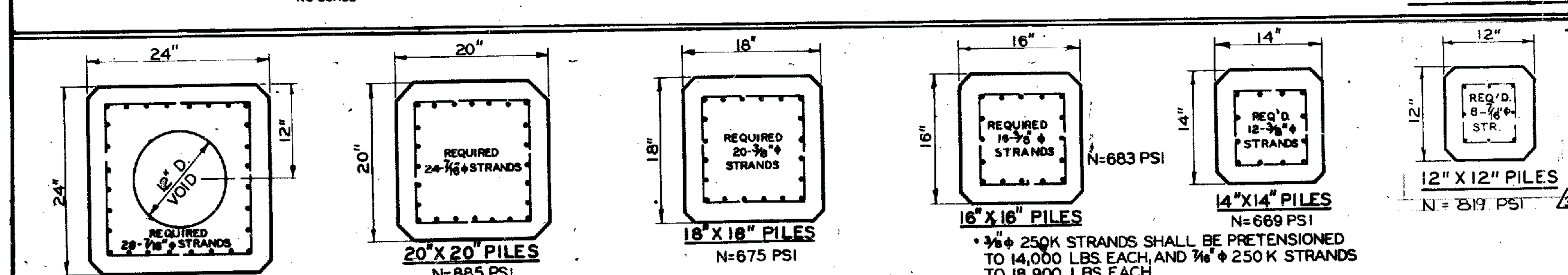


• 3/8" Φ 250K STRANDS SHALL BE PRETENSIONED TO 14,000 LBS. EACH, AND 7/16" Φ 250K STRANDS TO 18,900 LBS. EACH.

WIRE SPIRALS SHALL BE NO. 5 BIRMINGHAM GAGE.

## 250K STRAND PILE CROSS SECTIONS
SCALE: 1"=1'-0"

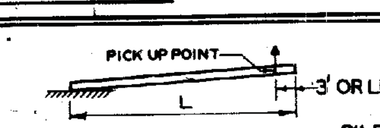


| MAX. PILE LENGTH | PILE SIZE |
|---|---|
| 30 FT. | 14"X14" |
| 38 FT. | 16"X16" |
| 34 FT. | 18"X18" |
| 39 FT. | 20"X20" |
| 46 FT. | 24"X24" |
| 27 FT. | 12 X 12 |

## SINGLE POINT PICKUP

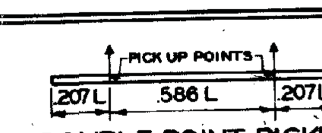


## DOUBLE POINT PICKUP

### NOTES
1. PILES SHALL BE PLAINLY MARKED TO INDICATE PROPER PICK-UP POINTS FOR ATTACHING HANDLING LINES.
2. THE TWO POINT PICK-UP SHALL BE USED FOR HANDLING AND TRANSPORTING PILES FROM CASTING YARD TO JOB SITE IN ALL CASES, AND FOR UNLOADING AND STORING AT JOB SITE.

| | DATE | REVISIONS | BY |
|---|---|---|---|
| 1 | 12-18-74 | CORRECTED 16"X16" PILES | J.E.T. |
| 2 | 2-4-81 | 14" SQ. PILES | J.E.T. |
| 3 | 2-22-84 | ADDED 12" SQ. PILES | J.E.T. |

DEPARTMENT OF TRANSPORTATION
STATE OF GEORGIA

# STANDARD SQUARE PRESTRESSED CONCRETE PILES

SCALE: AS SHOWN
OCTOBER 1974

DESIGNED W.B.L.-J.E.T.
DRAWN J.E.T.
TRACED M.V.W.
CHECKED J.W.P.

SUBMITTED C.L. Chapman Jr. BRIDGE ENGINEER
APPROVED Thomas D. Moreland STATE HIGHWAY ENGINEER

NUMBER 3215

REVISION DATES

STATE OF GEORGIA
DEPARTMENT OF TRANSPORTATION
OFFICE: INNOVATIVE PROGRAM DELIVERY
GEORGIA STANDARDS

DRAWING No. 41-005