RELEASED FOR CONSTRUCTION 10-31-2014

STATE	PROJECT NUMBER	SHEET NO.	TOTAL SHEETS
GA	BRSTO-0076-01(036)	194	267

STATE	PROJECT NUMBER	SHEET NO.	TOTAL SHEETS
GA.			

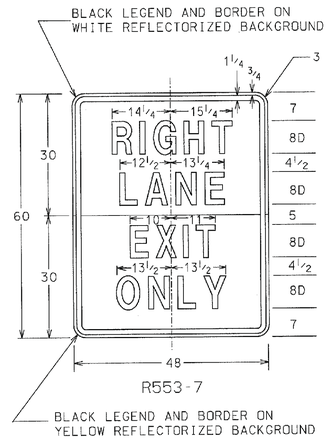

R553-7

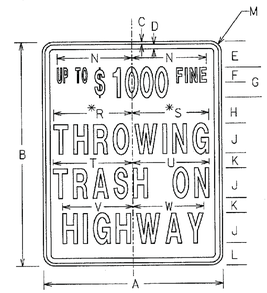

R553-1

* REDUCE SPACING 20%

SIGN	DIMENSIONS (INCHES)																			
	A	B	C	D	E	F	G	H	J	K	L	M	N	R	S	T	U	V	W
STD & MIN	24	30	3/8	5/8	3 1/2	2B	4C	3 1/2	4C	2	3	1 1/2	10	10 1/2	10 1/4	10 3/4	10 1/8	9 3/8	9 1/2
EXPWY	36	48	5/8	7/8	6	3B	6C	6	6C	3	6	2 1/4	15	15 3/4	15 3/8	16 1/4	15 3/16	14 1/16	14 1/4
FWY	48	60	3/4	1 1/4	7	4B	7C	8	8C	4	6	3	20	21	20 1/2	21 1/2	20 1/4	18 3/4	19

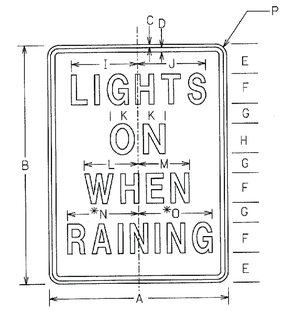

R554-1

* REDUCE SPACING 30%

SIGN	DIMENSIONS (INCHES)														
	A	B	C	D	E	F	G	H	I	J	K	L	M	N	O	P
STD & MIN	24	30	5/8	5/8	3 5/8	4D	2 1/4	4E	8 3/4	9 1/4	4	6 3/4	7 1/4	9 1/4	9 3/4	1 1/2
EXPWY	36	48	5/8	7/8	6	6D	4	6E	13 1/4	13 3/4	5 1/2	10 3/4	10 1/4	14 1/4	14 3/4	2 1/4
FWY	48	60	3/4	1 1/4	7 1/4	8D	4 1/2	8E	17 1/8	17 7/8	7	14 3/8	13 5/8	18 5/8	19 3/8	3

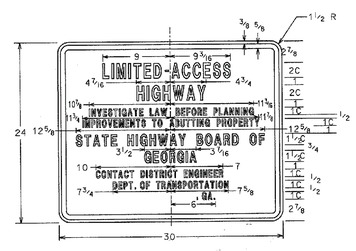

R552-1

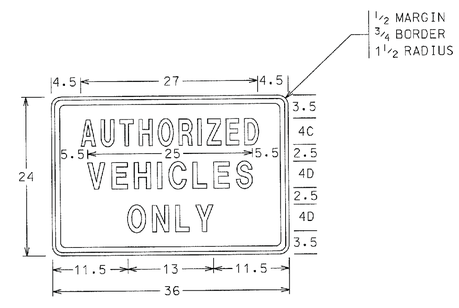

R552-2

DATE	REVISIONS

GEORGIA DEPARTMENT OF TRANSPORTATION
OFFICE OF TRAFFIC SAFETY & DESIGN

DETAILS OF
REGULATORY SIGNS
SHEET 2 OF 2

NO SCALE JANUARY 2000

T-5B

REVISION DATES		

STATE OF GEORGIA
DEPARTMENT OF TRANSPORTATION
OFFICE: INNOVATIVE PROGRAM DELIVERY
CONSTRUCTION DETAILS

DRAWING No. 40-011

3/1/2007 GPLN