STATE	PROJECT NUMBER	SHEET NO.	TOTAL SHEETS
GA.	BRST0-0076-01(036)	169	267

RELEASED FOR CONSTRUCTION: 11/14/2014

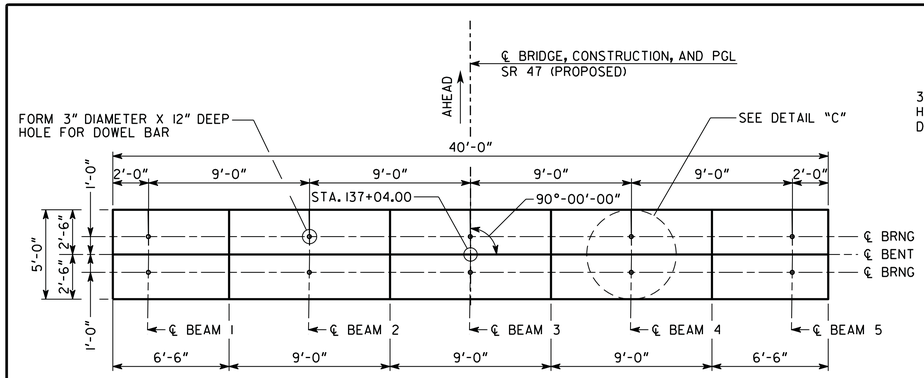

PLAN

SCALE: 1/4" = 1'-0"

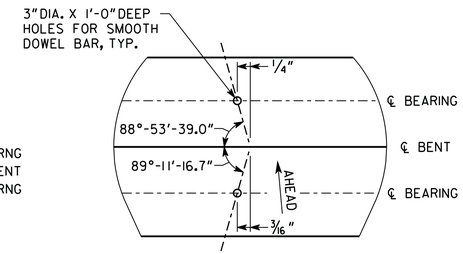

DETAIL "C"

NO SCALE

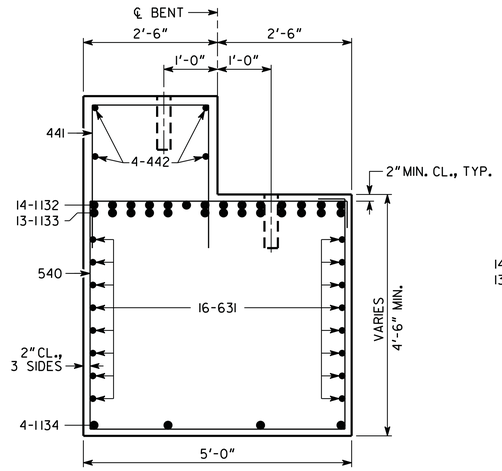

SECTION A-A

SCALE: 3/4" = 1'-0"

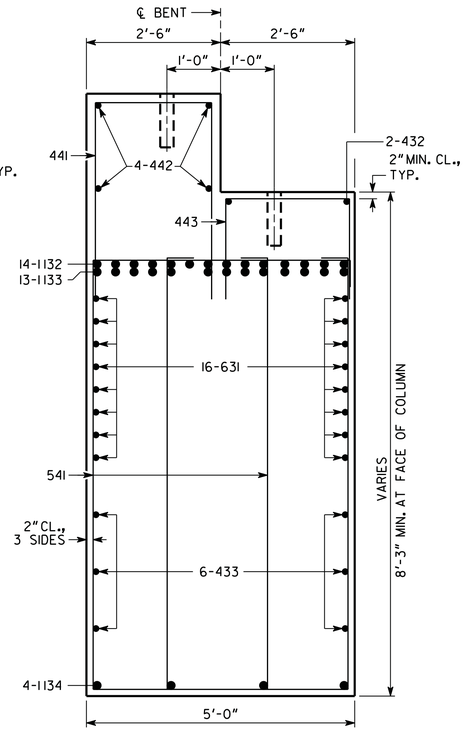

SECTION B-B

SCALE: 3/4" = 1'-0"

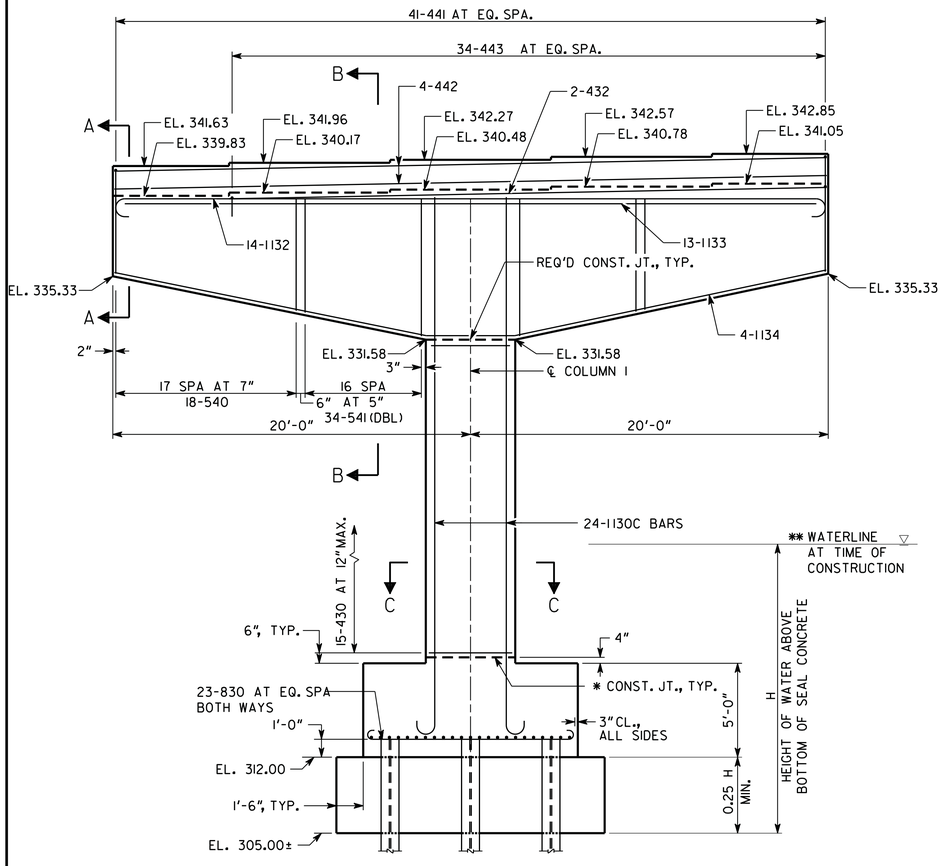

ELEVATION

SCALE: 1/4" = 1'-0"
LOOKING AHEAD

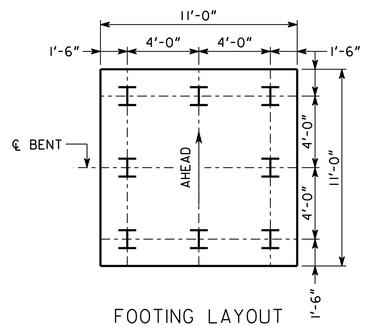

FOOTING LAYOUT

SCALE: 1/4" = 1'-0"

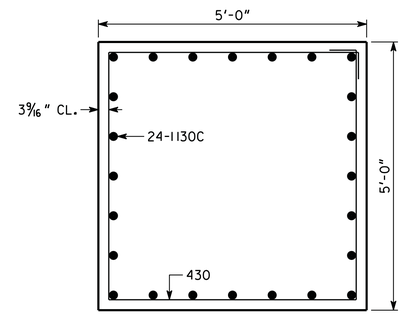

SECTION C-C

SCALE: 3/4" = 1'-0"

ALL PILES SHALL BE HP 14 X 102

PLAN DRIVING OBJECTIVE

ALL PILES SHALL BE DRIVEN TO A DRIVING RESISTANCE OF 183 TONS AFTER A MINIMUM TIP ELEVATION OF 250.00 IS ACHIEVED.

NOTES

1. MAINTAIN 2" MIN. CL. ON ALL REINFORCEMENT UNLESS NOTED OTHERWISE.
2. BARS 433 AND 631 NOT SHOWN IN ELEVATION.
3. * AT CONTRACTOR'S OPTION CONSTRUCTION JOINT MAY BE RELOCATED TO TOP OF FOOTING.
4. ** NORMAL POOL ELEVATION OF 329.41 USED FOR DESIGN, QUANTITIES, AND REBAR CALCULATIONS. DO NOT LOWER ELEVATION OF BOTTOM OF FOOTING WITHOUT CONSULTING THE ENGINEER.

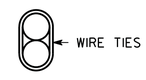

BARS TO BE BUNDLED SHALL BE BUNDLED VERTICALLY

BUNDLING DETAIL

NOT TO SCALE

SUBSTRUCTURE QUANTITIES

ITEM	BENT 4
CU YD CLASS AA CONCRETE	96.2
LB BAR REINF STEEL	15567

BRIDGE NO. 1

Baker

MICHAEL BAKER CORPORATION
3595 ENGINEERING DRIVE
NORCROSS, GEORGIA 30092
(770) 263-9118

GEORGIA
DEPARTMENT OF TRANSPORTATION
ENGINEERING DIVISION-OFFICE OF BRIDGES AND STRUCTURES

HAMMERHEAD BENT DETAILS - BENT 4

S.R. 47 OVER LITTLE RIVER (CLARKS HILL LAKE)

LINCOLN/COLUMBIA COUNTY BRST0-0076-01(036)

SCALE: AS SHOWN NOVEMBER 2014

DRAWING NO. 35-021
BRIDGE SHEET 21 OF 33

REVISIONS | DATE | BY

DESIGNED BSB/ANZ | CHECKED JCR/AWB | REVIEWED WMD/DLC
DRAWN BSB | DESIGN GROUP DLC | APPROVED BFR

1 INCH WHEN PRINTED FULL SIZE

11/18/2014 2:57:19 PM Y:\Roadways\138973\Bridge\Final\B0121-BT4.dgn