STATE	PROJECT NUMBER	SHEET NO.	TOTAL SHEETS
GA.	BRST0-0076-01(036)	169	267

RELEASED FOR CONSTRUCTION: 11/14/2014

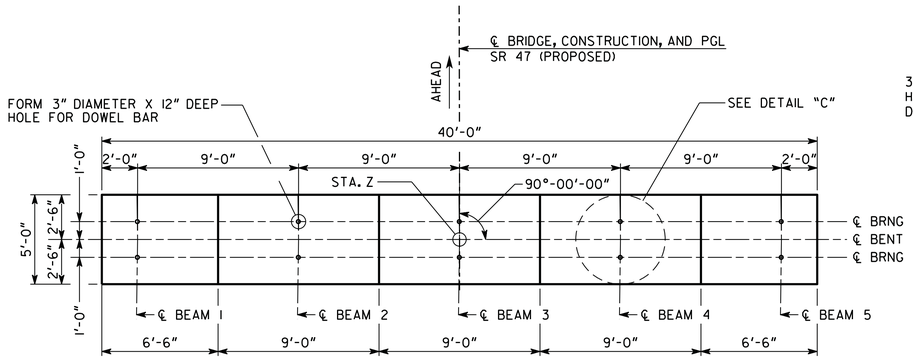

PLAN
SCALE: 1/4" = 1'-0"

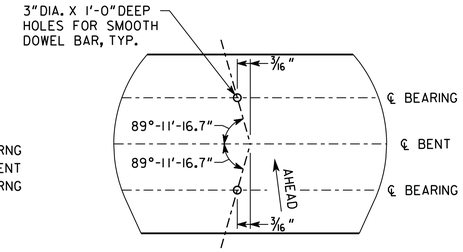

DETAIL "C"
NO SCALE

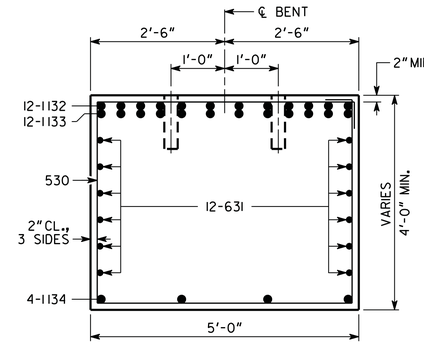

SECTION A-A
SCALE: 3/4" = 1'-0"

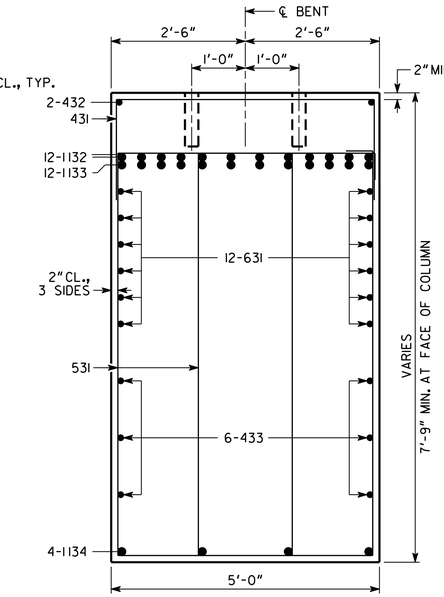

SECTION B-B
SCALE: 3/4" = 1'-0"

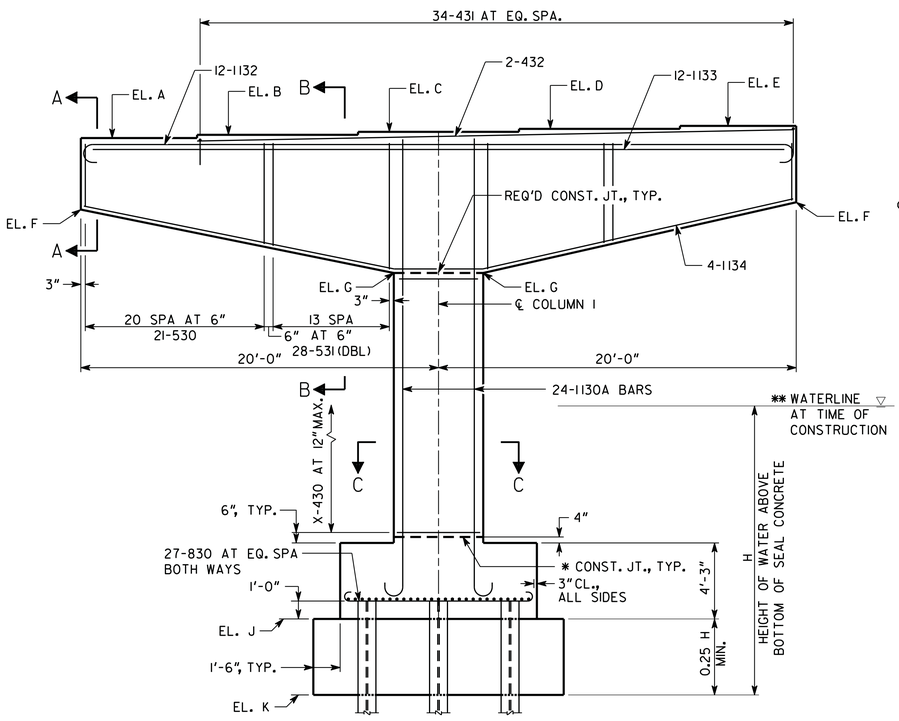

ELEVATION
SCALE: 1/4" = 1'-0"
LOOKING AHEAD
BENT 2 SHOWN (BENT 3 SIMILAR)

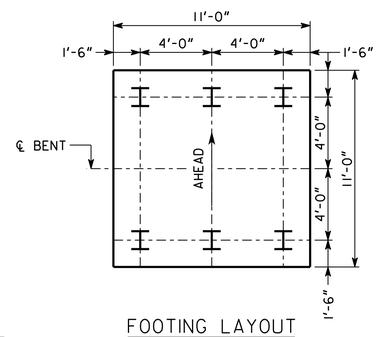

FOOTING LAYOUT
SCALE: 1/4" = 1'-0"

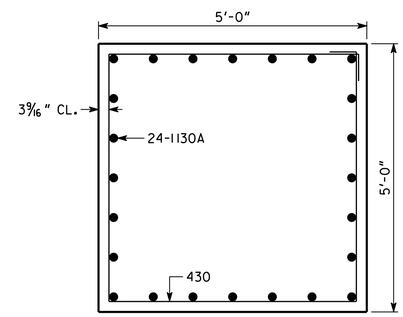

SECTION C-C
SCALE: 3/4" = 1'-0"

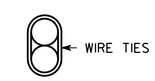

BARS TO BE BUNDLED SHALL BE BUNDLED VERTICALLY

BUNDLING DETAIL
NOT TO SCALE

NOTES

1. MAINTAIN 2" MIN. CL. ON ALL REINFORCEMENT UNLESS NOTED OTHERWISE.
2. BARS 433 AND 631 NOT SHOWN IN ELEVATION.
3. * AT CONTRACTOR'S OPTION CONSTRUCTION JOINT MAY BE RELOCATED TO TOP OF FOOTING.
4. ** NORMAL POOL ELEVATION OF 329.41 USED FOR DESIGN, QUANTITIES, AND REBAR CALCULATIONS. DO NOT LOWER EL. J WITHOUT CONSULTING THE ENGINEER.

ALL PILES SHALL BE HP 14 X 117

PLAN DRIVING OBJECTIVE

ALL PILES SHALL BE DRIVEN TO A DRIVING RESISTANCE OF 205 TONS AFTER MINIMUM TIP ELEVATIONS ARE ACHEIVED AS FOLLOWS:
BENT 2 ------ ELEV. 278.00
BENT 3 ------ ELEV. 265.00

BRIDGE NO. 1

TABLE OF ELEVATIONS

	STA. Z	X		A	B	C	D	E	F	G	J	K
BENT 2	135+01.33	11	BK	339.62	339.92	340.23	340.53	340.84	335.62	331.87	317.50	313.50±
			AH	339.62	339.92	340.23	340.53	340.84				
BENT 3	136+02.67	15	BK	340.48	340.79	341.09	341.40	341.70	336.39	332.67	314.00	308.00±
			AH	340.39	340.73	341.03	341.34	341.61				

SUBSTRUCTURE QUANTITIES

ITEM	BENT 2	BENT 3
CU YD CLASS AA CONCRETE	78.2	82.6
LB BAR REINF STEEL	13975	14566

Baker
MICHAEL BAKER CORPORATION
3595 ENGINEERING DRIVE
NORCROSS, GEORGIA 30092
(770) 263-9118

GEORGIA
DEPARTMENT OF TRANSPORTATION
ENGINEERING DIVISION-OFFICE OF BRIDGES AND STRUCTURES

HAMMERHEAD BENT DETAILS - BENT 2 & 3
S.R. 47 OVER LITTLE RIVER (CLARKS HILL LAKE)
LINCOLN/COLUMBIA COUNTY BRST0-0076-01(036)

SCALE: AS SHOWN NOVEMBER 2014

DRAWING NO. 35-020
BRIDGE SHEET 20 OF 33

REVISIONS | DATE | BY

DESIGNED BSB/ANZ | CHECKED JCR/AWB | REVIEWED WMD/DLC
DRAWN BSB | DESIGN GROUP DLC | APPROVED BFR

1 INCH WHEN PRINTED FULL SIZE