STATE	PROJECT NUMBER	SHEET NO.	TOTAL SHEETS
GA.	BRST0-0076-01(036)	1G7	2G7

RELEASED FOR CONSTRUCTION: 11/14/2014

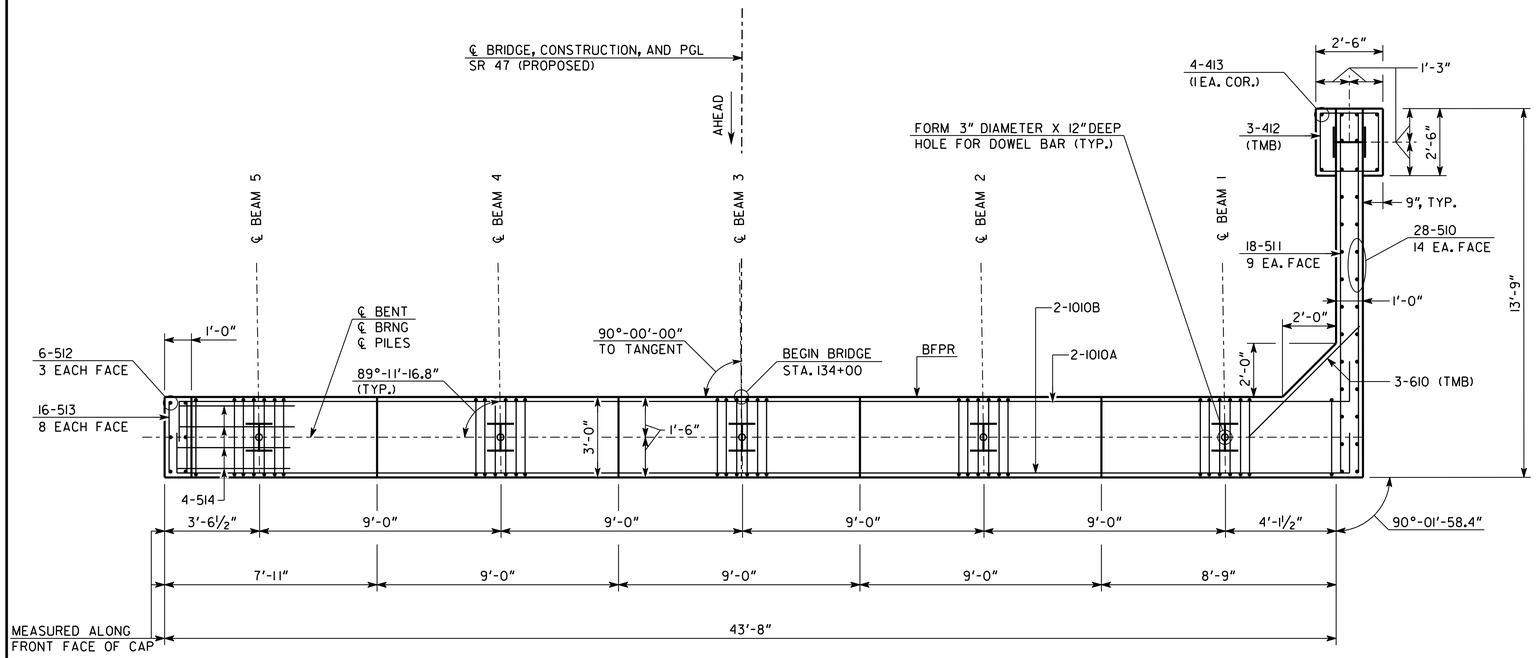

PLAN
SCALE: ⅜" = 1'-0"

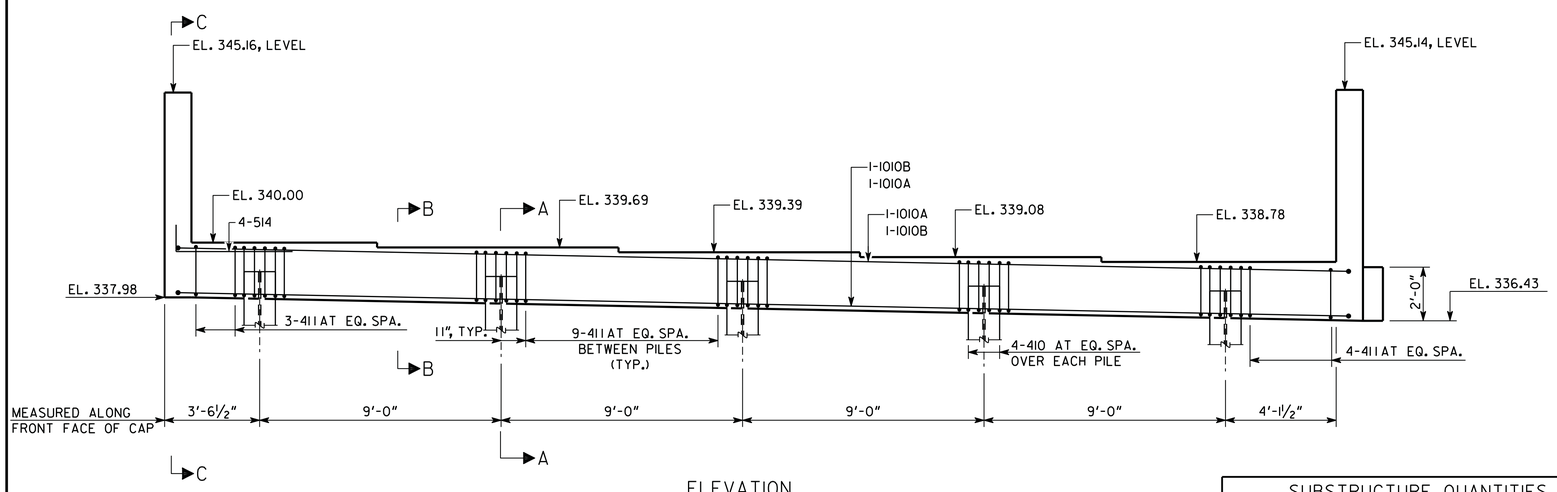

ELEVATION
(LOOKING BACK)
SCALE: ⅜" = 1'-0"

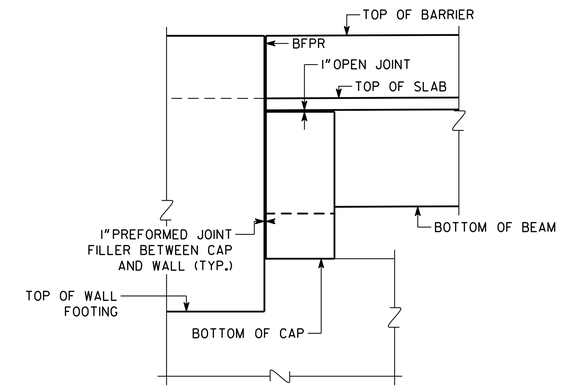

SECTION C-C
NO SCALE

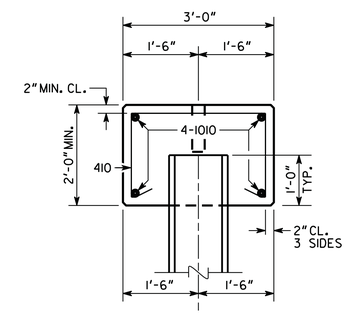

SECTION A-A
SCALE: ¾" = 1'-0"

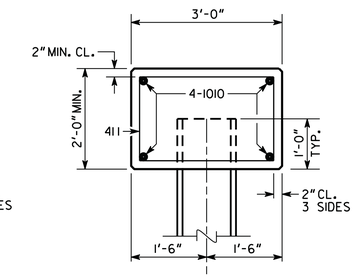

SECTION B-B
SCALE: ¾" = 1'-0"

ALL PILES SHALL BE HP 14X117

PLAN DRIVING OBJECTIVE

ALL PILES SHALL BE DRIVEN TO A DRIVING RESISTANCE OF 203 TONS AFTER A MINIMUM TIP ELEVATION OF 280.00 IS ACHEIVED

BRIDGE NO. 1

NOTES:

1. MAINTAIN 2" CLEARANCE ON ALL REINFORCEMENT UNLESS OTHERWISE NOTED.
2. POUR WINGWALLS MONOLITHICALLY WITH THE CAP.
3. SEE GEORGIA STANDARD 9037 FOR DRAINAGE DETAILS AT END BENT.
4. WINGWALL PILES NOT SHOWN IN ELEVATION.
5. BOTTOM OF WINGWALLS ARE LEVEL.

SUBSTRUCTURE QUANTITIES	
ITEM	BENT 1
CU YD CLASS AA CONCRETE	16.0
LB BAR REINF STEEL	1827

DRAWING NO. 35-019

BRIDGE SHEET 19 OF 33

REVISIONS | DATE | BY

Baker

MICHAEL BAKER CORPORATION
3595 ENGINEERING DRIVE
NORCROSS, GEORGIA 30092
(770) 263-9118

GEORGIA
DEPARTMENT OF TRANSPORTATION
ENGINEERING DIVISION-OFFICE OF BRIDGES AND STRUCTURES

END BENT 1 DETAILS

S.R. 47 OVER LITTLE RIVER (CLARKS HILL LAKE)

LINCOLN/COLUMBIA COUNTY BRST0-0076-01(036)

SCALE: AS SHOWN NOVEMBER 2014

DESIGNED BSB/ANZ CHECKED JCR/AWB REVIEWED WMD/DLC
DRAWN BSB DESIGN GROUP DLC APPROVED BFR

1 INCH WHEN PRINTED FULL SIZE

11/18/2014 2:57:15 PM Y:\Roadways\138973\Bridge\Final\B0119-BT1.dgn