STATE	PROJECT NUMBER	SHEET NO.	TOTAL SHEETS
GA.	BRST0-0076-01(036)	159	267

RELEASED FOR CONSTRUCTION: 11/14/2014

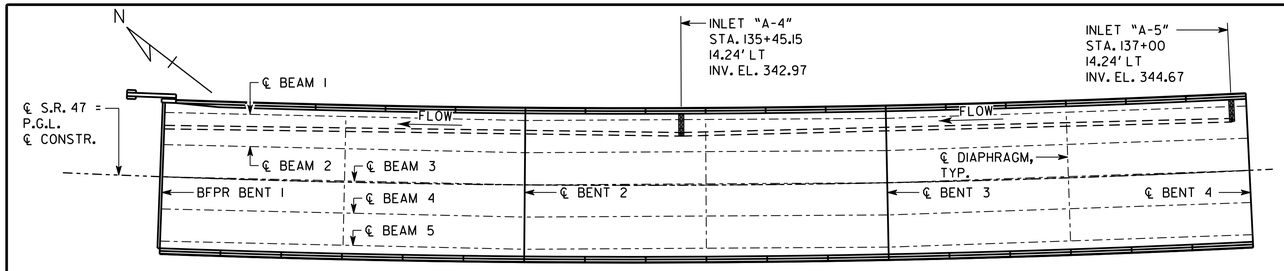

PLAN - SPAN 1-3
SCALE: 1" = 20'-0"

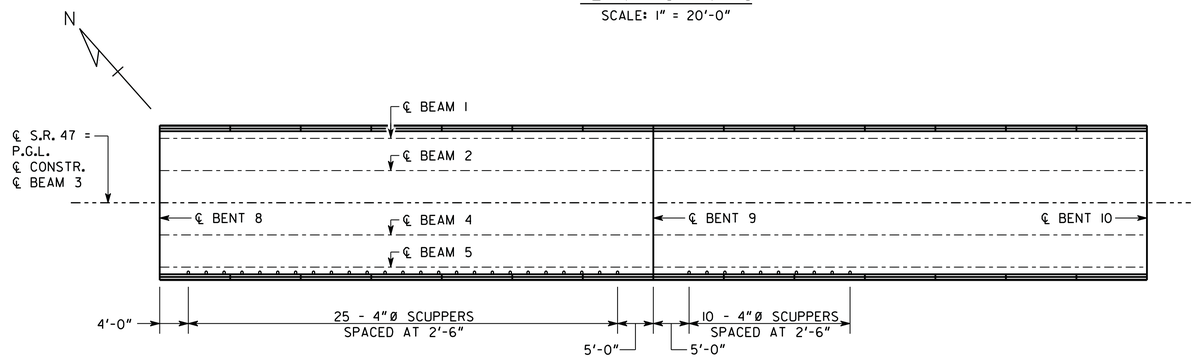

PLAN - SPAN 8 & 9
SCALE: 1" = 20'-0"

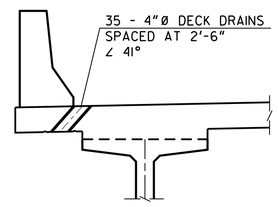

SCUPPER DETAIL
NO SCALE

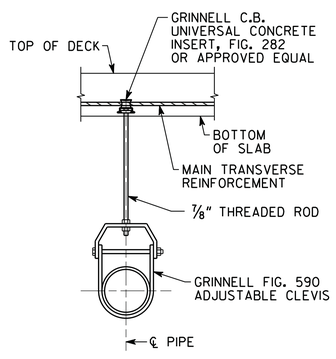

12" Ø DRAIN PIPE HANGER
NO SCALE

HANGER NOTES:

1. PROVIDE HANGERS AT 8'-0" O/C (MAX).
2. PROVIDE LOCK NUTS FOR ALL BOLTS.
3. ENTIRE HANGER SHALL BE HOT-DIPPED GALVANIZED PER ASTM A 123.

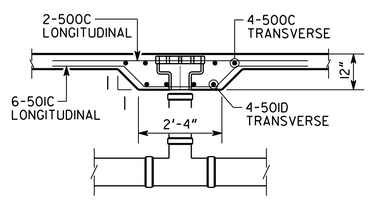

SECTION A-A
NO SCALE

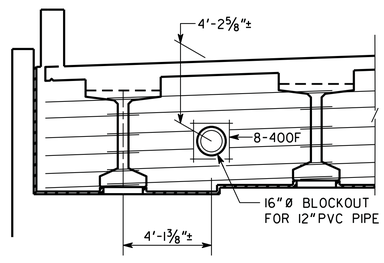

SECTION THRU ENDWALL
LOOKING AHEAD
NO SCALE

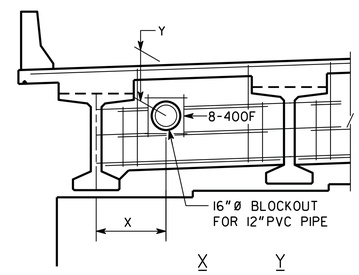

	X	Y
BENT 2:	3'-3"	3'-4 7/16"
BENT 3:	2'-11 13/16"	3'-0"

SECTION THRU EDGEBEAM
LOOKING AHEAD
NO SCALE

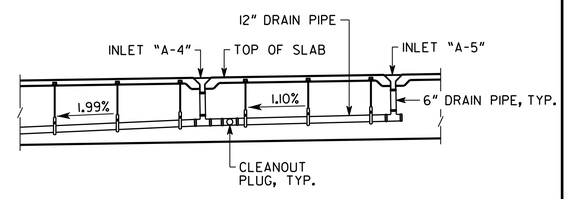

ELEVATION
NO SCALE

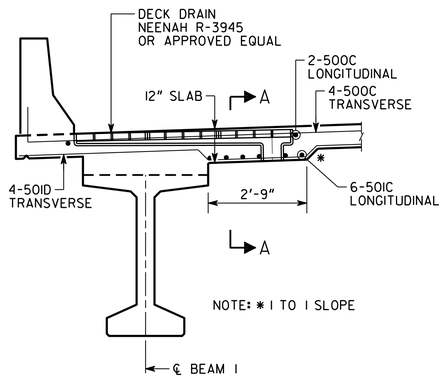

BRIDGE SECTION AT DECK DRAINS
NO SCALE

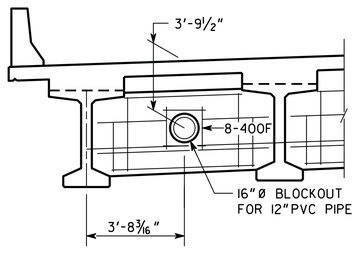

SECTION THRU DIAPHRAGM - SPAN 1
LOOKING AHEAD
NO SCALE

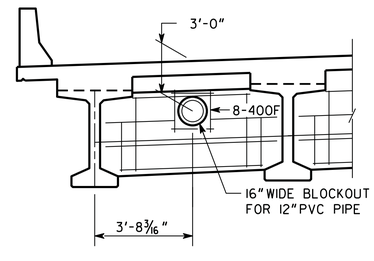

SECTION THRU DIAPHRAGM - SPAN 2 & 3
LOOKING AHEAD
NO SCALE

BRIDGE NO. 1

Baker

MICHAEL BAKER CORPORATION
3595 ENGINEERING DRIVE
NORCROSS, GEORGIA 30092
(770) 263-9118

GEORGIA
DEPARTMENT OF TRANSPORTATION
ENGINEERING DIVISION-OFFICE OF BRIDGES AND STRUCTURES

DATE | REVISIONS | BY

DECK DRAINAGE DETAILS
S.R. 47 OVER LITTLE RIVER (CLARKS HILL LAKE)
LINCOLN/COLUMBIA COUNTY BRST0-0076-01(036)

SCALE: AS SHOWN NOVEMBER 2014

DRAWING NO. 35-011
BRIDGE SHEET 11 OF 33

DESIGNED BSB/ANZ | CHECKED JCR/AWB | REVIEWED WMD/DLC
DRAWN BSB | DESIGN GROUP DLC | APPROVED BFR

1 INCH WHEN PRINTED FULL SIZE

11/18/2014 2:56:59 PM Y:\Roadways\138973\Bridge\Final\B011-DRNG.dgn