STATE	PROJECT NUMBER	SHEET NO.	TOTAL SHEETS
GA.	BRST0-0076-01(036)	159	267

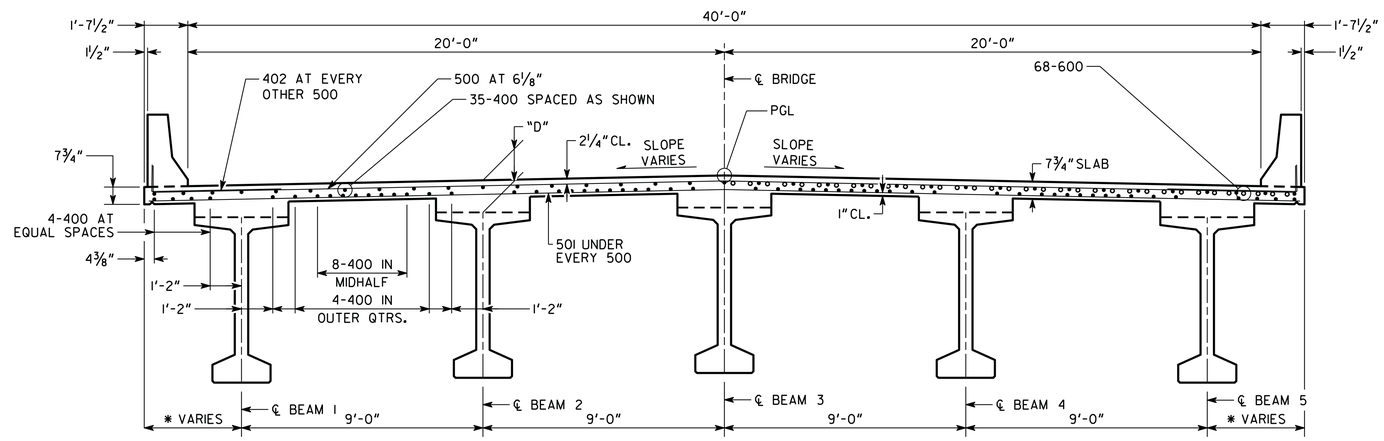

SECTION THRU SLAB

SCALE: ⅜" = 1'-0"

* SPAN 4-6: 3'-7 7/16" MIN.
  4'-3½" MAX.
* SPAN 7: 3'-7½" MIN.
  4'-11/16" MAX.
* SPAN 8-16: 3'-6½"

SECTION THRU SLAB AT INTERMEDIATE BENT

SCALE: ⅜" = 1'-0"

* SPAN 4-6: 3'-7 7/16" MIN.
  4'-3½" MAX.
* SPAN 7: 3'-7½" MIN.
  4'-11/16" MAX.
* SPAN 8-16: 3'-6½"

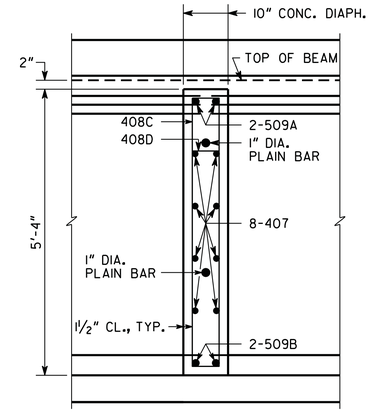

SLAB REINFORCEMENT NOT SHOWN

SECTION THRU DIAPHRAGM

NO SCALE

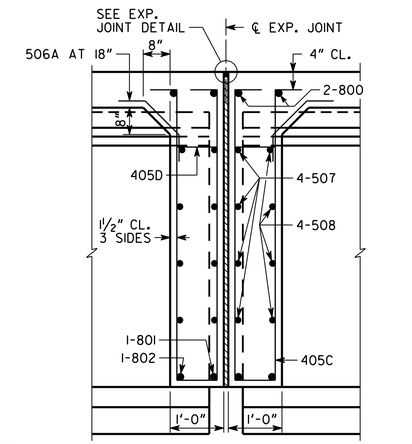

SLAB REINFORCEMENT NOT SHOWN

SECTION THRU EDGE BEAM

NO SCALE
BENT 7, 10, & 13

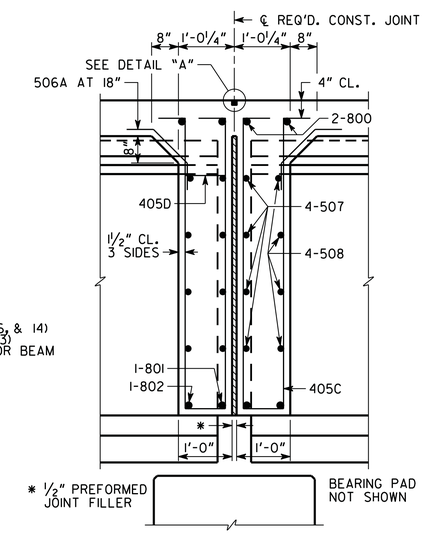

SLAB REINFORCEMENT NOT SHOWN

SECTION THRU EDGE BEAM

NO SCALE
BENT 5, 6, 8, 9, 11, 12, & 14

DIMENSION "D" IS MEASURED FROM TOP OF SLAB TO TOP OF BEAMS AT CENTERLINE BEARING. VARY "D" BETWEEN BEARINGS TO COMPENSATE FOR DEAD LOAD DEFLECTION AND VERTICAL CURVE. MAINTAIN A CONSTANT SLAB THICKNESS OF 7¾"

"D" = 15⅛" SPAN 4 EXT. BEAMS
"D" = 14⅝" SPAN 4 INT. BEAMS
"D" = 15⅛" SPAN 5 EXT. BEAMS
"D" = 14⅝" SPAN 5 INT. BEAMS
"D" = 14⅛" SPAN 6 EXT. BEAMS
"D" = 13⅝" SPAN 6 INT. BEAMS
"D" = 11⅞" SPAN 7, BEAM 1
"D" = 10⅞" SPAN 7, BEAM 2
"D" = 10⅝" SPAN 7, BEAM 3
"D" = 10¾" SPAN 7, BEAM 4
"D" = 10" SPAN 7, BEAM 5
"D" = 10⅛" SPAN 8, BEAM 1
"D" = 10" SPAN 8, BEAM 2
"D" = 9¾" SPAN 8, BEAM 3
"D" = 11" SPAN 8, BEAM 4
"D" = 12¾" SPAN 8, BEAM 5
"D" = 10" SPANS 9-13
"D" = 14¾" SPAN 14 EXT. BEAMS
"D" = 14⅜" SPAN 14 INT. BEAMS

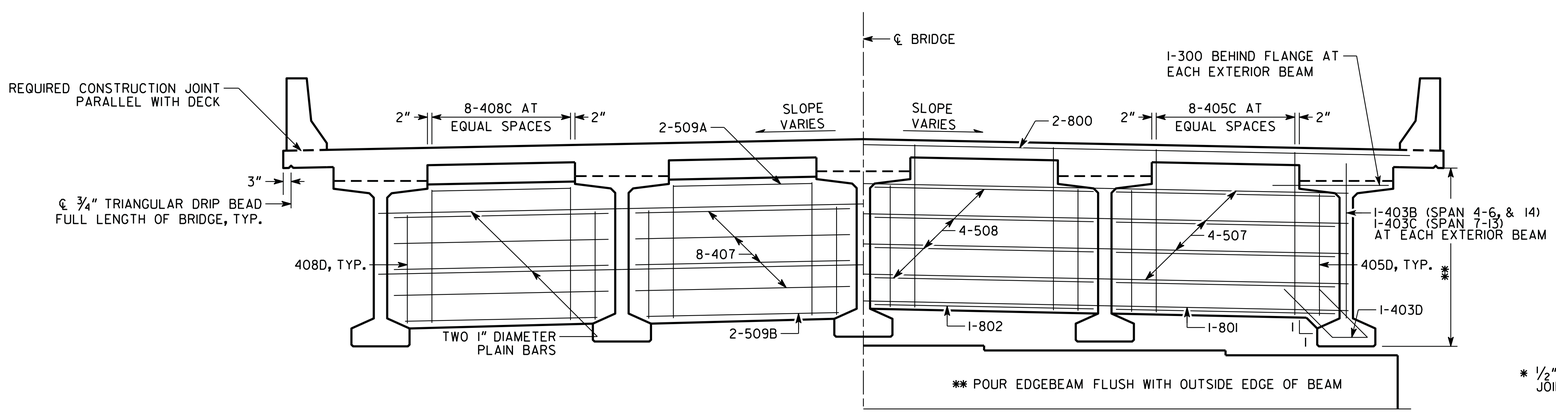

SECTION THRU DIAPHRAGM

SCALE: ⅜" = 1'-0"

SECTION THRU EDGE BEAM

SCALE: ⅜" = 1'-0"

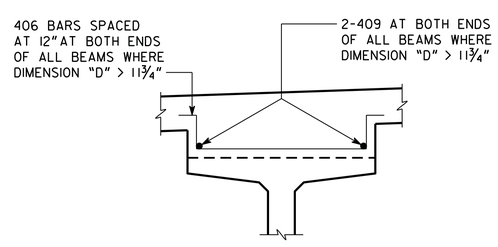

COPING REINFORCEMENT DETAIL

NO SCALE

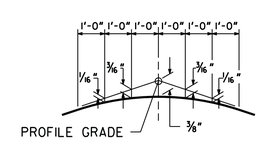

CROWN DETAIL

NO SCALE
2% CROSS SLOPE
BENT 8-14

BRIDGE NO. 1

Baker
MICHAEL BAKER CORPORATION
3595 ENGINEERING DRIVE
NORCROSS, GEORGIA 30092
(770) 263-9118

GEORGIA
DEPARTMENT OF TRANSPORTATION
ENGINEERING DIVISION-OFFICE OF BRIDGES AND STRUCTURES

DATE | REVISIONS | BY

DECK SECTIONS - SPAN 4 THRU 14
S.R. 47 OVER LITTLE RIVER (CLARKS HILL LAKE)
LINCOLN/COLUMBIA COUNTY BRST0-0076-01(036)

DRAWING NO. 35-010
BRIDGE SHEET 10 OF 33

SCALE: AS SHOWN | NOVEMBER 2014

DESIGNED BSB/ANZ | CHECKED JCR/AWB | REVIEWED WMD/DLC
DRAWN BSB | DESIGN GROUP DLC | APPROVED BFR

1 INCH WHEN PRINTED FULL SIZE

RELEASED FOR CONSTRUCTION: 11/14/2014