STATE	PROJECT NUMBER	SHEET NO.	TOTAL SHEETS
GA.	BRST0-0076-01(036)	157	267

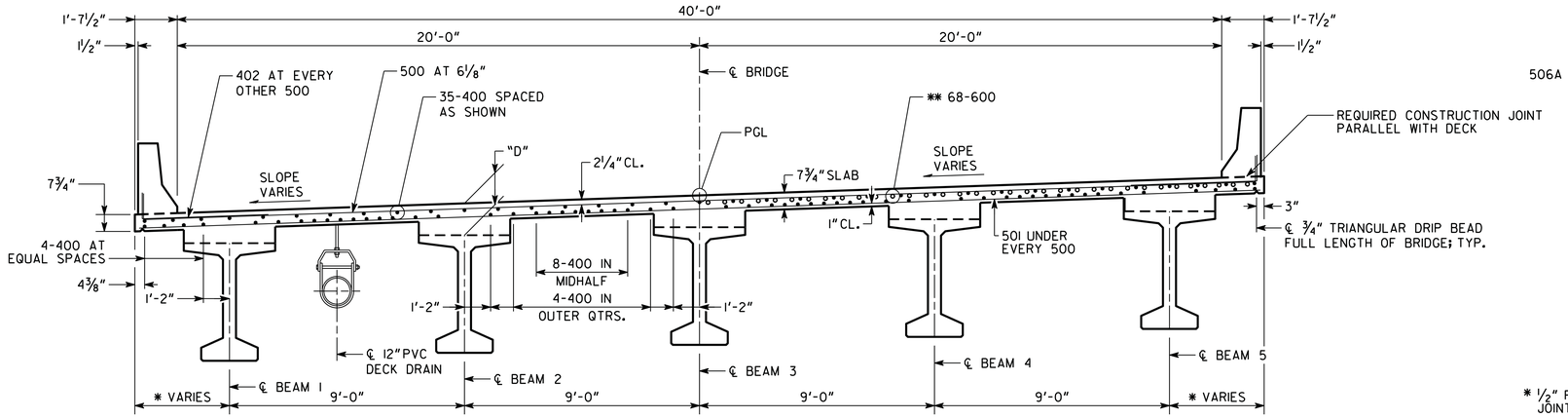

SECTION THRU SLAB - SPAN 1-3

SCALE: ⅜" = 1'-0"
* SPAN 1-3: 3'-3 3/16" MIN.
3'-7½" MAX.
* SPAN 15: 3'-7½"

SECTION THRU SLAB AT INTERMEDIATE BENT - SPAN 1-3

SCALE: ⅜" = 1'-0"
** OMIT 600 BARS OVER EXPANSION JOINTS

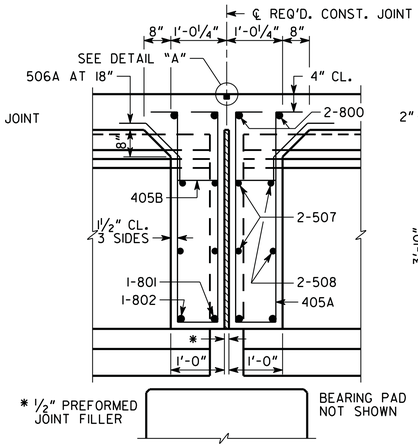

SLAB REINFORCEMENT NOT SHOWN

SECTION THRU EDGE BEAM

BENTS 2 & 3
NO SCALE

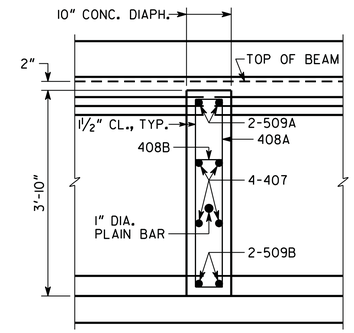

SLAB REINFORCEMENT NOT SHOWN

SECTION THRU DIAPHRAGM

NO SCALE

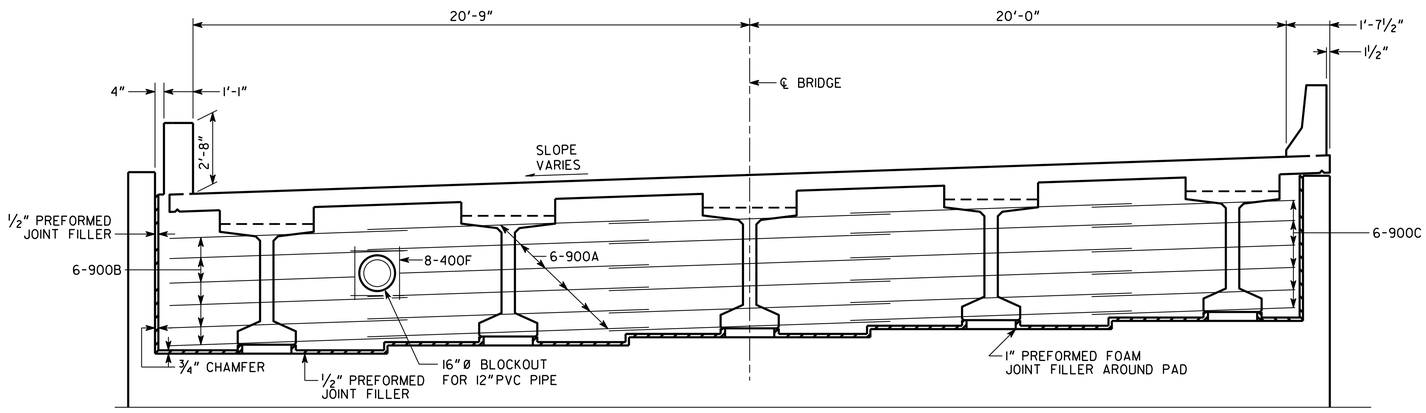

SECTION THRU ENDWALL - SPAN 1

404, 504, 505, 506 BARS NOT SHOWN
SCALE: ⅜" = 1'-0"

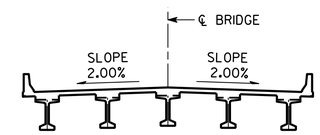

SECTION THRU SLAB - SPAN 15

SCALE: 3/16" = 1'-0"
SEE SPAN 1-3 SECTIONS FOR DIMENSIONS AND DETAILS

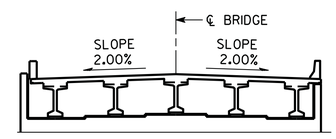

SECTION THRU ENDWALL - SPAN 15

SCALE: 3/16" = 1'-0"
SEE SPAN 1-3 SECTIONS FOR DIMENSIONS AND DETAILS

DIMENSION "D" IS MEASURED FROM TOP OF SLAB TO TOP OF BEAMS AT CENTERLINE BEARING. VARY "D" BETWEEN BEARINGS TO COMPENSATE FOR DEAD LOAD DEFLECTION AND VERTICAL CURVE. MAINTAIN A CONSTANT SLAB THICKNESS OF 7¾"

"D" = 13" SPANS 1-2
"D" = 14" SPAN 3 EXT. BEAMS
"D" = 13⅝" SPAN 3 INT. BEAMS
"D" = 13⅞" SPAN 15

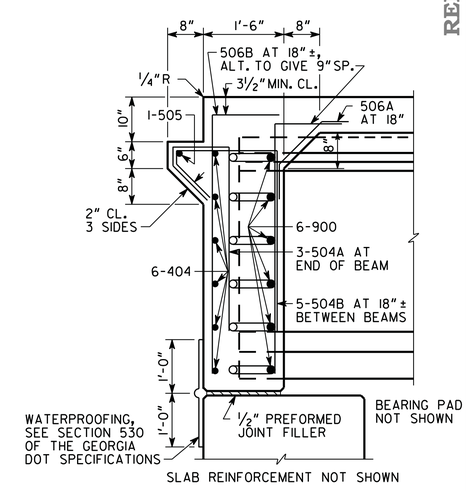

SLAB REINFORCEMENT NOT SHOWN

SECTION AT ENDWALL

NO SCALE

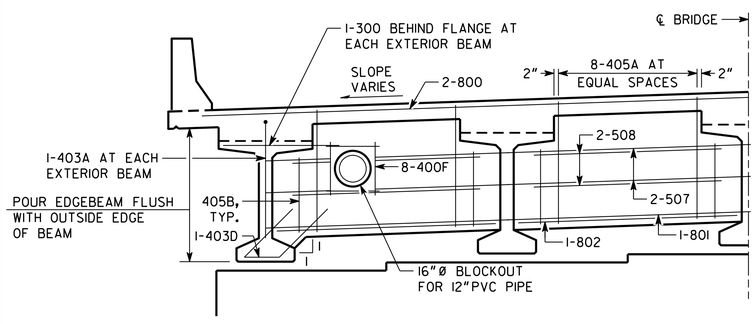

SECTION THRU EDGE BEAM

SCALE: ⅜" = 1'-0"

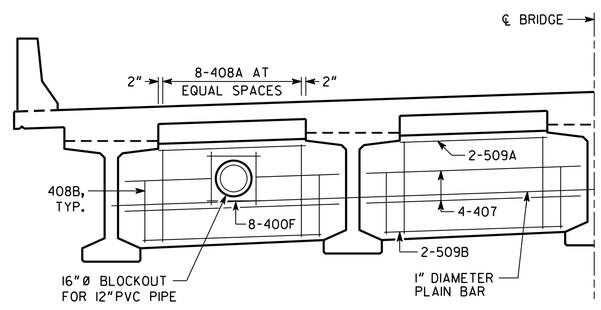

SECTION THRU DIAPHRAGM

SCALE: ⅜" = 1'-0"

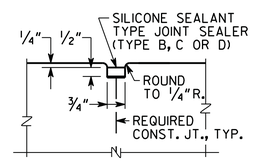

DETAIL "A"

NO SCALE

BRIDGE NO. 1

Baker
MICHAEL BAKER CORPORATION
3595 ENGINEERING DRIVE
NORCROSS, GEORGIA 30092
(770) 263-9118

GEORGIA
DEPARTMENT OF TRANSPORTATION
ENGINEERING DIVISION-OFFICE OF BRIDGES AND STRUCTURES

DECK SECTIONS - SPAN 1,2,3,& 15
S.R. 47 OVER LITTLE RIVER (CLARKS HILL LAKE)
LINCOLN/COLUMBIA COUNTY BRST0-0076-01(036)

SCALE: AS SHOWN NOVEMBER 2014

DATE	REVISIONS	BY

DRAWING NO. 35-009
BRIDGE SHEET 9 OF 33

DESIGNED BSB/ANZ | CHECKED JCR/AWB | REVIEWED WMD/DLC
DRAWN BSB | DESIGN GROUP DLC | APPROVED BFR

1 INCH WHEN PRINTED FULL SIZE

RELEASED FOR CONSTRUCTION: 11/14/2014