STATE	PROJECT NUMBER	SHEET NO.	TOTAL SHEETS
GA.	BRST0-0076-01(036)	156	267

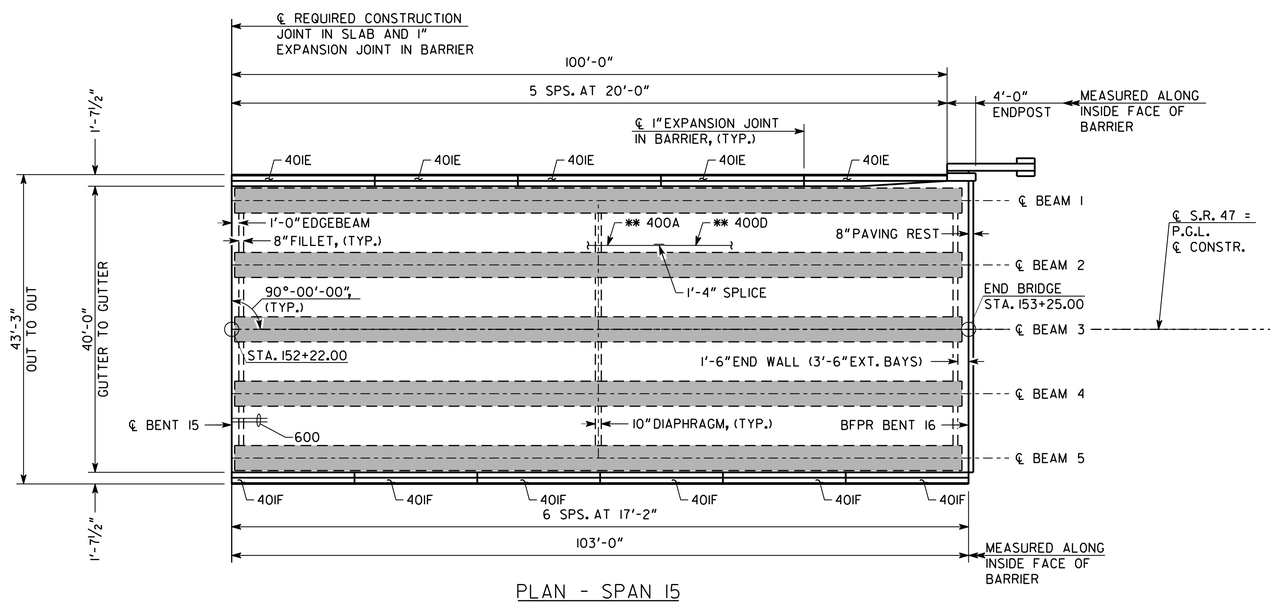

PLAN - SPAN 15

SCALE: 1" = 10'-0"

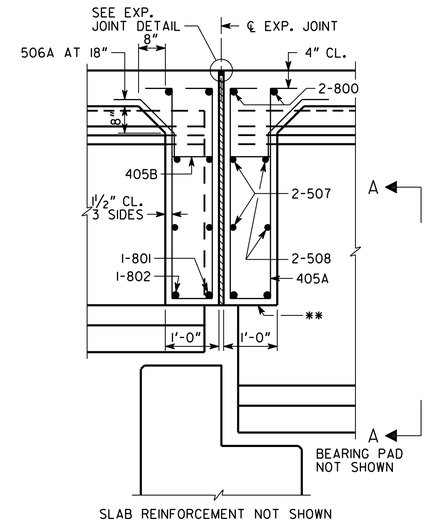

SECTION THRU EDGE BEAM

NO SCALE

BENT 4

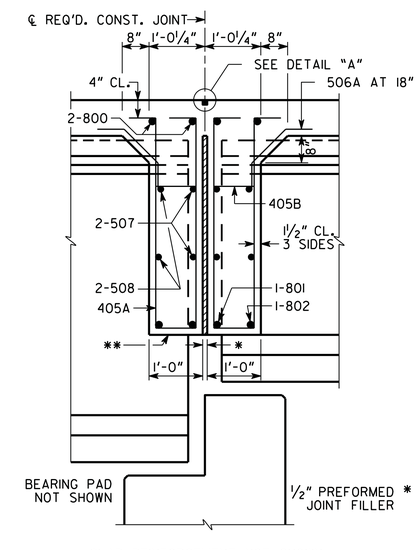

SECTION THRU EDGE BEAM

NO SCALE

BENT 15

* TAPERS TO 0" AT END POST

** AT CONTRACTOR'S OPTION, 10" RADIUS MAY BE REPLACED BY STRAIGHT INTERSECTING SLOPES.

** DO NOT REMOVE EDGE BEAM FORMS UNTIL DECK IS POURED AND REACHES 28 DAY CONCRETE STRENGTH

JOINT OPENING BENT 4	
TEMPERATURE (°F)	W (IN.)
40	2½"
70	1¾"
100	1"

JOINT OPENING BENT 7, 10, & 13	
TEMPERATURE (°F)	W (IN.)
40	3"
70	2⅛"
100	1¼"

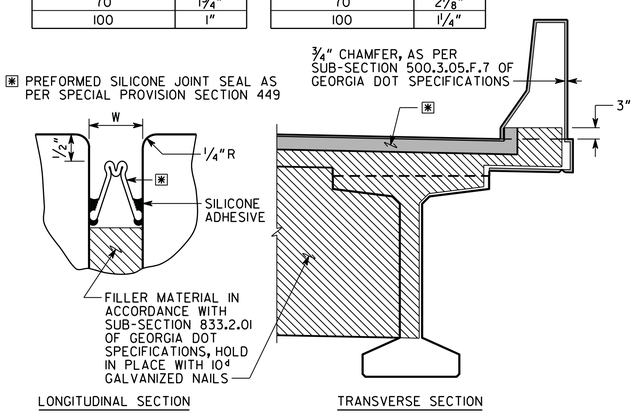

EXPANSION JOINT DETAILS

BENTS 4, 7, 10, & 13

NO SCALE

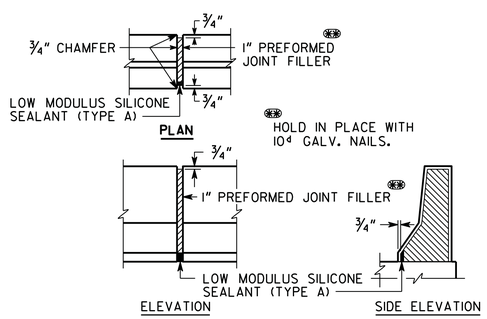

DETAILS OF 1" EXPANSION JOINT IN BARRIER

NO SCALE

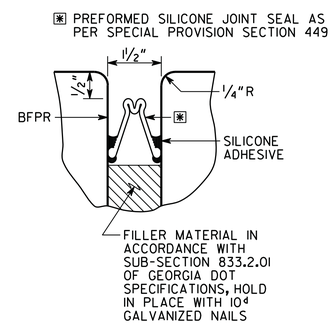

EXPANSION JOINT AT END BENT

NO SCALE

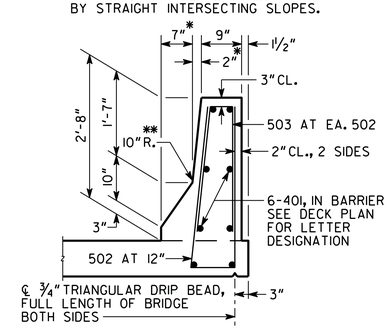

BARRIER DETAIL

NO SCALE

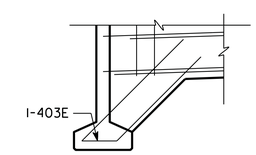

SECTION A-A

NO SCALE

BENT 4 SHOWN

(BENT 15 SIMILAR)

BRIDGE NO. 1

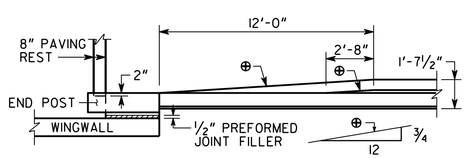

BARRIER TRANSITION DETAIL

NO SCALE

SUPERSTRUCTURE QUANTITIES		
ITEM	SPAN 15	TOTAL
LUMP - SUPERSTR. CONCRETE, CU YDS., CLASS AA	164.8	2,736.8
LUMP - SUPERSTR. REINF. STEEL, LBS.	34,040	599,383

NOTE: MAINTAIN 2" CLEARANCE ON ALL REINFORCEMENT UNLESS OTHERWISE NOTED.

** ALTERNATE 400 BARS ACROSS DECK TO STAGGER LAP LOCATION.

RELEASED FOR CONSTRUCTION: 11/14/2014

Baker

MICHAEL BAKER CORPORATION
3595 ENGINEERING DRIVE
NORCROSS, GEORGIA 30092
(770) 263-9118

GEORGIA
DEPARTMENT OF TRANSPORTATION
ENGINEERING DIVISION-OFFICE OF BRIDGES AND STRUCTURES

DATE | REVISIONS | BY

DECK PLANS

S.R. 47 OVER LITTLE RIVER (CLARKS HILL LAKE)

LINCOLN/COLUMBIA COUNTY BRST0-0076-01(036)

SCALE: AS SHOWN NOVEMBER 2014

DRAWING NO. 35-008

BRIDGE SHEET 8 OF 33

DESIGNED BSB/ANZ | CHECKED JCR/AWB | REVIEWED WMD/DLC

DRAWN BSB | DESIGN GROUP DLC | APPROVED BFR

1 INCH WHEN PRINTED FULL SIZE

11/18/2014 2:56:52 PM Y:\Roadways\138973\Bridge\Final\B0108-DP3.dgn