STATE	PROJECT NUMBER	SHEET NO.	TOTAL SHEETS
GA.	BRST0-0076-01(036)	152	267

RELEASED FOR CONSTRUCTION: 11/14/2014

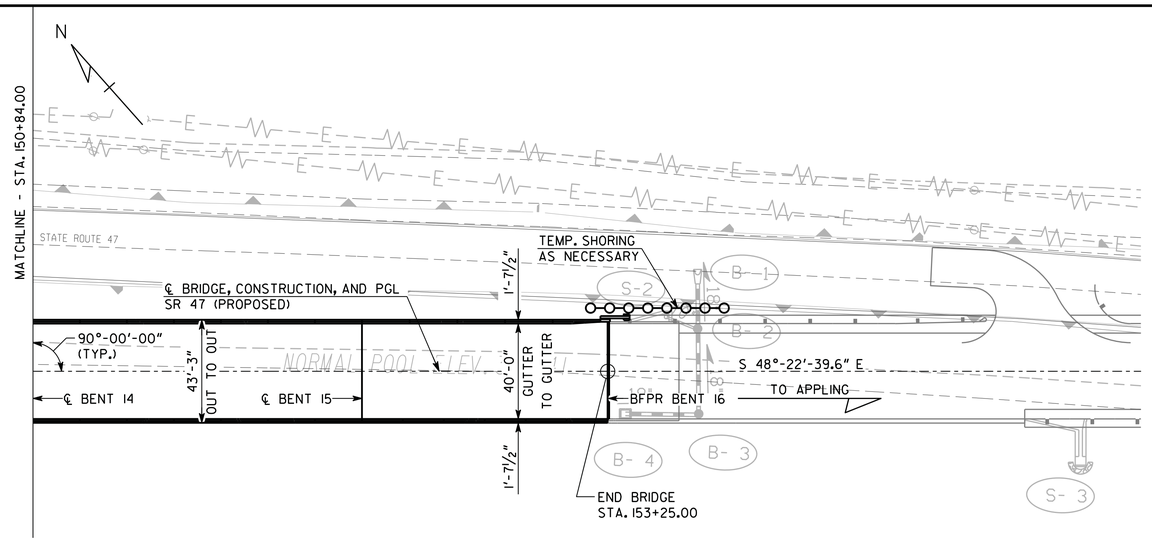

PLAN

SCALE: 1" = 30'-0"

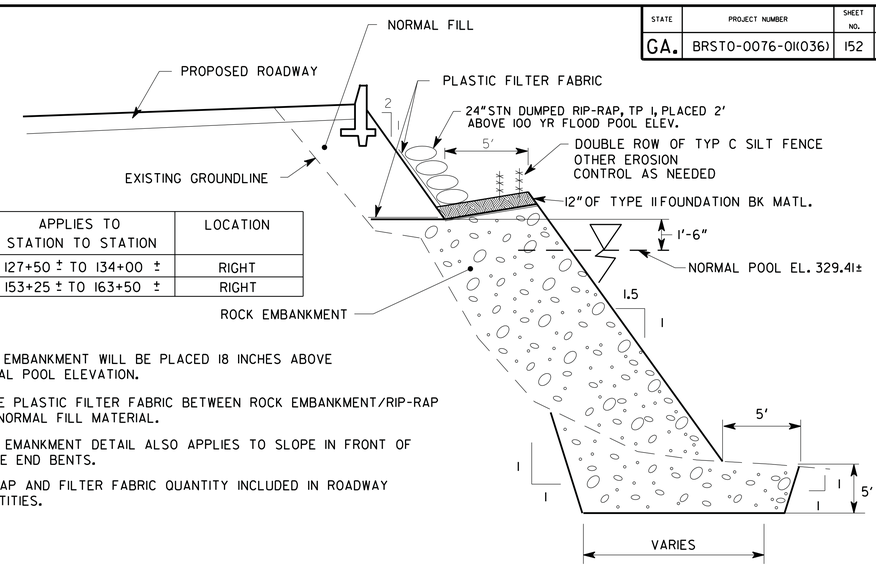

APPLIES TO STATION TO STATION	LOCATION
127+50 ± TO 134+00 ±	RIGHT
153+25 ± TO 163+50 ±	RIGHT

1. ROCK EMBANKMENT WILL BE PLACED 18 INCHES ABOVE NORMAL POOL ELEVATION.
2. PLACE PLASTIC FILTER FABRIC BETWEEN ROCK EMBANKMENT/RIP-RAP AND NORMAL FILL MATERIAL.
3. ROCK EMANKMENT DETAIL ALSO APPLIES TO SLOPE IN FRONT OF BRIDGE END BENTS.
4. RIP-RAP AND FILTER FABRIC QUANTITY INCLUDED IN ROADWAY QUANTITIES.

ROCK EMBANKMENT DETAIL

NO SCALE

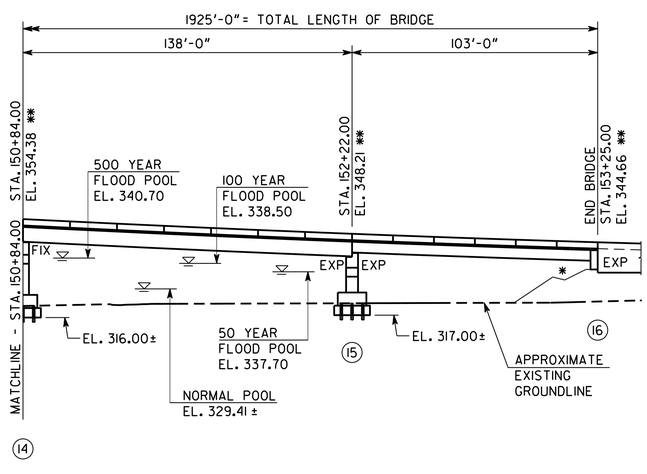

* SEE ROCK EMBANKMENT DETAIL

ELEVATION

SCALE: 1" = 30'-0"

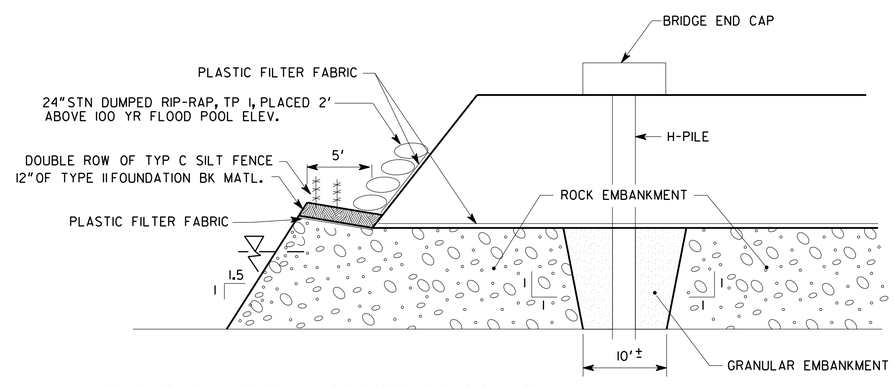

1. MATERIAL TO BE PLACED TO 18" ABOVE WATER LEVEL SHOULD BE ROCK EMBANKMENT, EXCEPT FOR THE AREAS IMMEDIATELY BENEATH THE ENDCAPS WHERE H-PILES WILL BE DRIVEN. AT THESE AREAS, GRANULAR EMBANKMENT SHOULD BE USED AS SHOWN.

ROCK EMBANKMENT AT ENDCAP DETAIL

NO SCALE

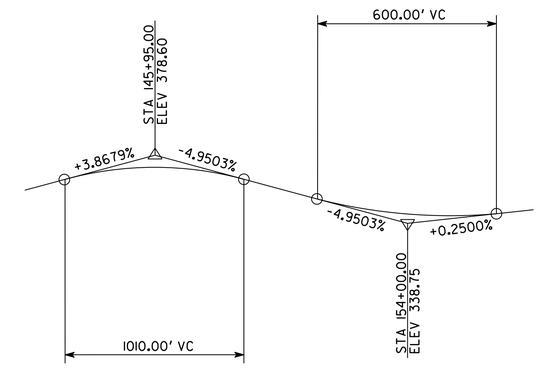

VERTICAL CURVE DATA

S.R. 47

BRIDGE NO. 1

Baker

MICHAEL BAKER CORPORATION
3595 ENGINEERING DRIVE
NORCROSS, GEORGIA 30092
(770) 263-9118

GEORGIA
DEPARTMENT OF TRANSPORTATION
ENGINEERING DIVISION-OFFICE OF BRIDGES AND STRUCTURES

PLAN AND ELEVATION

S.R. 47 OVER LITTLE RIVER (CLARKS HILL LAKE)

LINCOLN/COLUMBIA COUNTY BRST0-0076-01(036)

DATE	REVISIONS	BY

DRAWING NO. 35-004

BRIDGE SHEET 4 OF 33

SCALE: AS SHOWN NOVEMBER 2014

DESIGNED BSB/ANZ CHECKED JCR/AWB REVIEWED WMD/DLC
DRAWN BSB DESIGN GROUP DLC APPROVED BFR

1 INCH WHEN PRINTED FULL SIZE

11/18/2014 2:56:43 PM Y:\Roadways\138973\Bridge\Final\B0104-PE.dgn