STATE	PROJECT NUMBER	SHEET NO.	TOTAL SHEETS
GA.		117	148

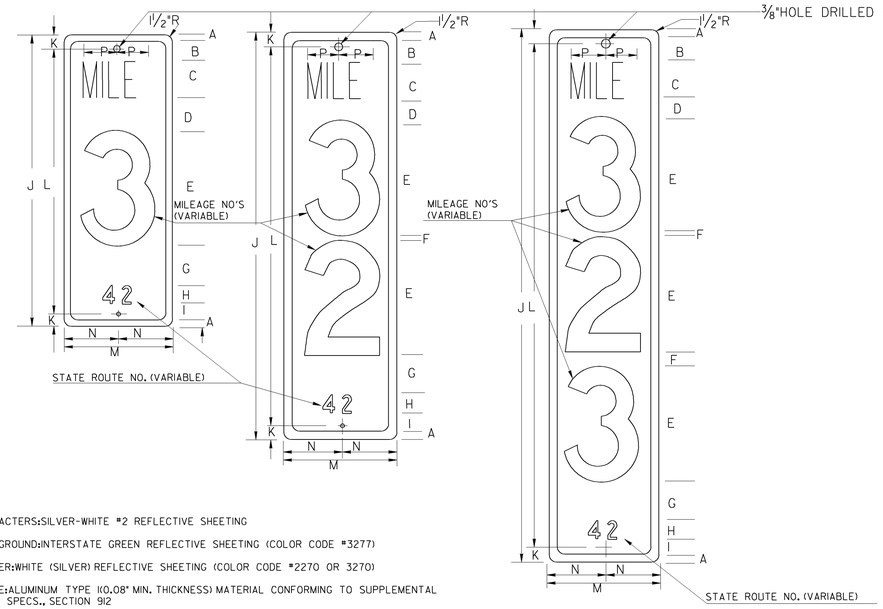

CHARACTERS: SILVER-WHITE #2 REFLECTIVE SHEETING

BACKGROUND: INTERSTATE GREEN REFLECTIVE SHEETING (COLOR CODE #3277)

BORDER: WHITE (SILVER) REFLECTIVE SHEETING (COLOR CODE #2270 OR 3270)

PLATE: ALUMINUM TYPE I (0.08" MIN. THICKNESS) MATERIAL CONFORMING TO SUPPLEMENTAL SPECS., SECTION 912

TYPICAL MILEPOST SIGN DETAILS

NOTE: INSTALLATION OF MILEPOST SHALL BE WITHHELD UNTIL THE GRASS IS ACCEPTED BY THE STATE.

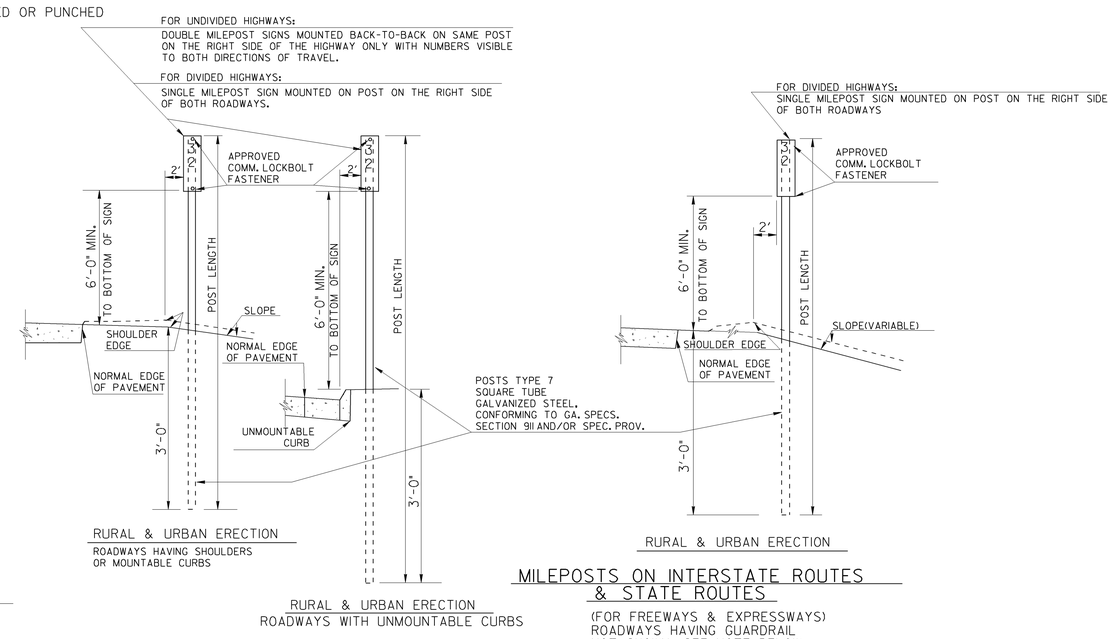

TYPICAL MILEPOST ERECTION DETAILS

NOTE: MILEPOSTS SHALL BE LOCATED IN LINE WITH DELINEATOR POST OR, IF APPROPRIATE, IN THE SAME PLANE AS FACE OF GUARDRAIL POST WITH THE BOTTOM OF THE MARKER AT THE SAME HEIGHT AS THE DELINEATOR AS SHOWN IN THE DETAILS ABOVE.

POST	STUB SIZE
TYPE 7	2¼" x 2¼"

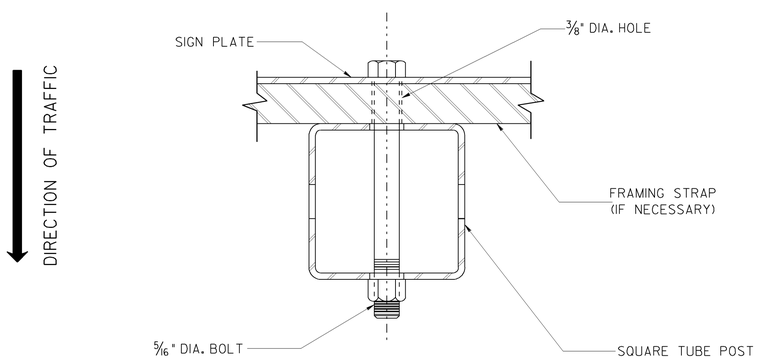

TYPICAL DETAIL

NOTE: SAMPLE OF COMMERCIAL LOCKBOLT FASTENER TO BE USED MUST BE SUBMITTED FOR APPROVAL PRIOR TO INSTALLATION

MILE POST MARKERS
DIMENSIONS (INCHES)

	FREEWAYS AND EXPRESSWAYS			CONVENTIONAL HIGHWAYS		
	1-DIGIT	2-DIGITS	3-DIGITS	1-DIGIT	2-DIGITS	3-DIGITS
A	½	½	½	½	½	½
B	2½	2½	2½	1½	1½	1½
C	4	4	4	4	4	4
D	3	3	3	2	2	2
E	10	10	10	6	6	6
F		3	2½		3	3
G	1¼	¾	¾	1¼	1¼	1¼
H	ID	ID	ID	ID	ID	ID
I	1¼	¾	¾	1¼	1¼	1¼
J	24	36	48	18	27	36
K	1	1	1	1	1	1
L	22	34	46	16	25	34
M	12	12	12	10	10	10
N	6	6	6	5	5	5
P	4¾	4¾	4¾	3¾	3¾	3¾
POST LENGTH (LIN.FT.)	11	12	13	11	12	12

GENERAL NOTES:

1. MILEPOST ARE TO BE LOCATED AND ERECTED ON ACCURATE MILEAGE MEASUREMENTS MADE ON EITHER THE NORTH-BOUND OR EASTBOUND ROADWAY BEGINNING WITH ZERO MILEAGE AT THE SOUTH OR WEST STATE LINES FOR THE INTERSTATE HIGHWAY SYSTEM AND AT THE SOUTH OR WEST COUNTY LINES FOR THE STATE HIGHWAY SYSTEM AND AT JUNCTIONS WHERE ROUTES BEGIN AND RUNNING CONTINUOUS WITHIN THE STATE FOR THE INTERSTATE HIGHWAY SYSTEM AND RUNNING CONTINUOUS WITHIN THE COUNTY FOR THE STATE HIGHWAY SYSTEM. CORRESPONDING MILEPOSTS FOR SB OR WB ROADWAY OF DIVIDED HIGHWAYS ONLY, ARE TO BE LOCATED DIRECTLY OPPOSITE THOSE ON NB OR EB ROADWAYS.
2. WHERE ANY INTERFERENCE PREVENTS INSTALLING THE MILEPOST AT ITS ACCURATE LOCATION, IT MAY BE MOVED IN EITHER DIRECTION A MAXIMUM OF 50'. IF IT CANNOT BE PLACED WITHIN THAT DEGREE OF ACCURACY, IT SHALL BE OMITTED. MEASUREMENT TO THE NEXT MILEPOST LOCATION SHALL BE MADE FROM THE ACCURATELY ESTABLISHED MILE LOCATION AND NOT FROM THE ADJUSTED LOCATION.
3. MILEPOSTS SHALL BE INSTALLED ONLY AFTER IMPROVEMENTS ON EITHER SYSTEM HAVE PROGRESSED SUFFICIENTLY TO PERMIT THE POSTING OF ACCURATE MILEAGE. MILEPOSTS WILL ONLY BE ERECTED ON PAVED ROADS.
4. IT SHALL BE THE RESPONSIBILITY OF THE ENGINEER TO MARK THE LOCATION AND NUMERICAL DESIGNATION OF EACH MILEPOST. DISTANCES WILL BE OBTAINED BY THE USE OF A CERTIFIED ODOMETER IN A VEHICLE TRAVELING IN THE RIGHT HAND LANE IN THE DIRECTION IN WHICH THE MILEAGE INCREASES. NUMERICAL DESIGNATIONS SHALL BE DETERMINED AND COORDINATED FROM OFFICIAL GEORGIA D.O.T. MILEPOST RECORDS. CONTACT THE OFFICE OF TRAFFIC ENGINEERING AND SAFETY FOR CERTIFIED MILEPOST DATA.
5. WHERE TWO ROUTES ARE COMMON, THE MILEAGE WILL ONLY BE CARRIED AS THE LOWER NUMBERED ROUTE, BUT THE CORRECT MILEAGE ON THE OTHER ROUTE WILL BE MEASURED AND AFTER THE ROUTES SEPARATE, MILEPOST SHOWING THE CORRECT MILEAGE WILL BE ERECTED AS USUAL.
6. MATERIALS SHALL CONFORM TO THE FOLLOWING SPECIFICATIONS:
   (A) HIGHWAY SIGNS-SECTION 636
   (B) SIGN FABRICATION-SECTION 910, EXCEPT THAT THE MESSAGE SHALL BE OF REFLECTIVE MATERIAL, PRESSURE SENSITIVE.
   (C) SIGN POST-SECTION 911 AND/OR SPEC. PROV.
   (D) SIGN BLANKS- SECTION 912
   (E) REFLECTORIZING MATERIALS-SECTION 913

	3-30-06	DATE
	REVISED POST TO A TYPE 7	REVISION
	G.L.O.	BY

DEPARTMENT OF TRANSPORTATION
STATE OF GEORGIA

STANDARD

MILEPOSTS

NO SCALE — RE-DRAWN SEPT. 1999

DES. ____ DRW. ____ TRA. ____ CHK. ____

(SUBMITTED) STATE ROAD & AIRPORT DESIGN ENGINEER

(APPROVED) CHIEF ENGINEER

NUMBER 9033