STATE	PROJECT NUMBER	SHEET NO.	TOTAL SHEETS
GA.	BRSTO-0076-01 (037)	108	148

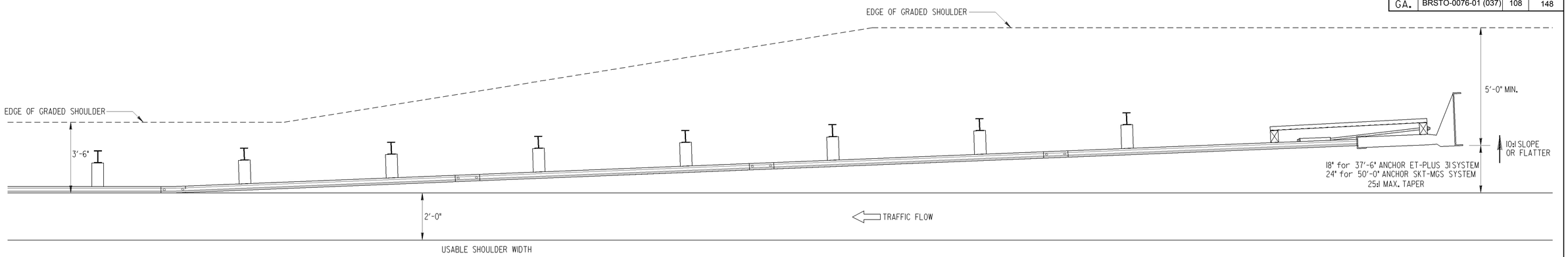

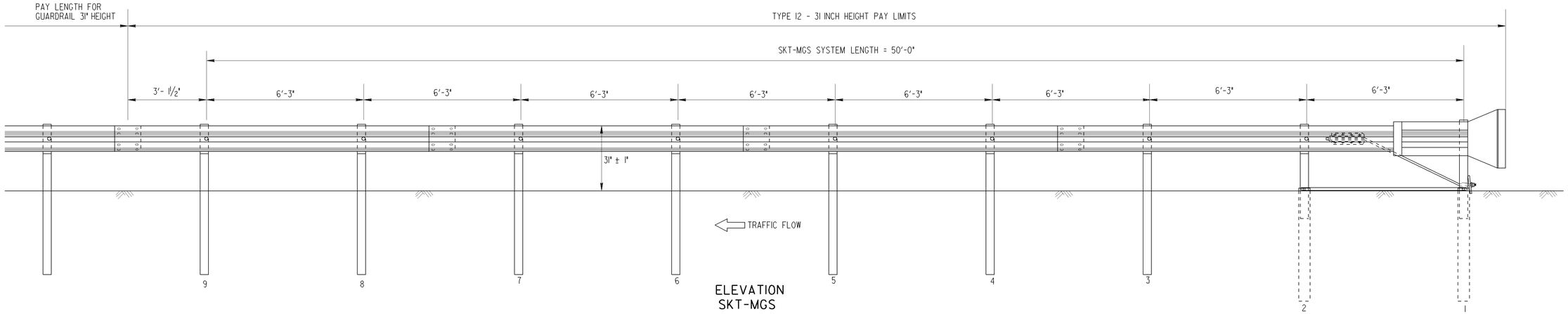

ELEVATION
SKT-MGS

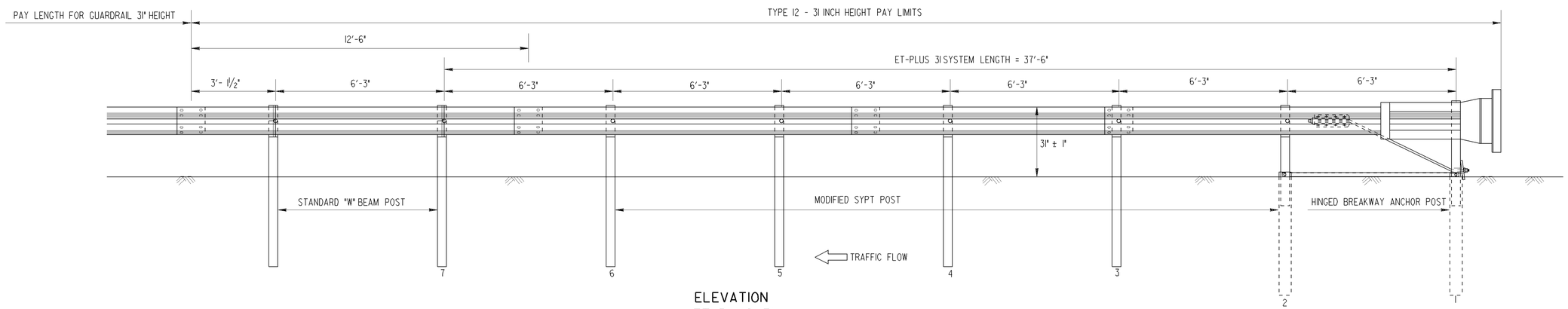

ELEVATION
ET-PLUS 31

GENERAL NOTES:

1. SPECIFICATIONS: GEORGIA STANDARD CURRENT EDITION, AND SUPPLEMENTS THERETO.
2. GUARDRAIL ANCHORAGE TYPE 12, 31INCH HEIGHT SHALL BE AN ET-PLUS 31 AS MANUFACTURED BY TRINITY INDUSTRIES, INC. OR AN SKT-MGS AS MANUFACTURED BY ROAD SYSTEMS, INC. AND SHALL BE INSTALLED ACCORDING TO MANUTACTURER'S RECOMMENDATIONS.
3. A MAXIMUM FLARE OF 25:1 OVER THE SYSTEM LENGTH OF THE TERMINAL IS REQUIRED FOR EITHER THE ET-PLUS 31OR THE SKT-MGS.

DATE	DEPARTMENT OF TRANSPORTATION STATE OF GEORGIA	
REVISION	STANDARD TYPE 12 31 INCH GUARDRAIL HEIGHT	
	NO SCALE	AUGUST 2011
BY	DES. G.L.O. (SUBMITTED) STATE DESIGN POLICY ENGINEER DRW. G.L.O. CHK. B.R.E. (APPROVED) CHIEF ENGINEER REVIEW B.A.S.	NUMBER 4384