SCALE SIZE IS 3/8 IN/FT

VOID

STATE	PROJECT NUMBER	SHEET NO.	TOTAL SHEETS
GA.	BRST0-0076-01(037)	72	148

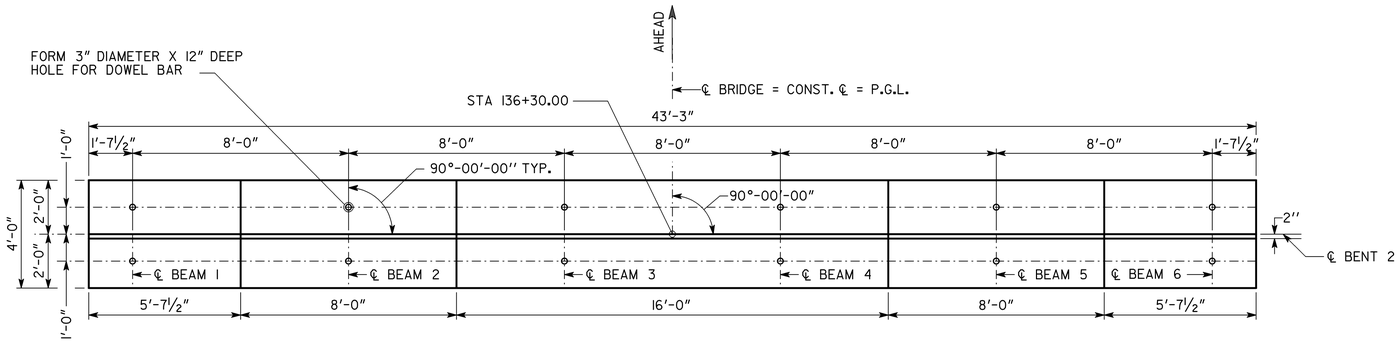

PLAN

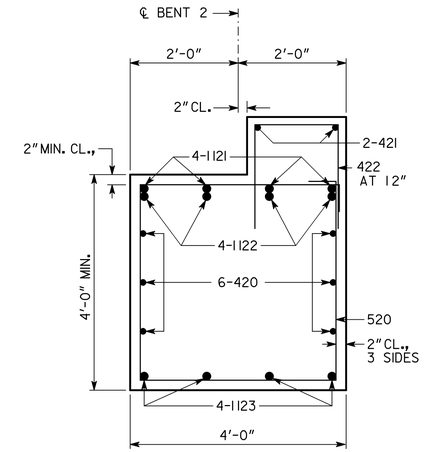

SECTION A-A

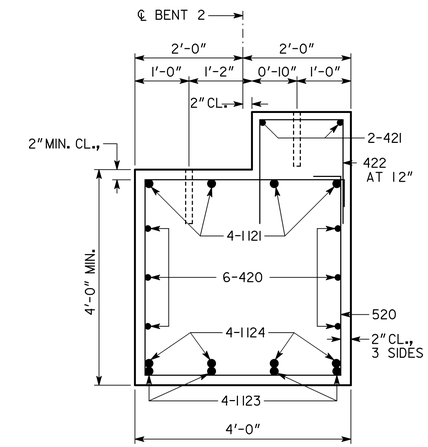

SECTION B-B

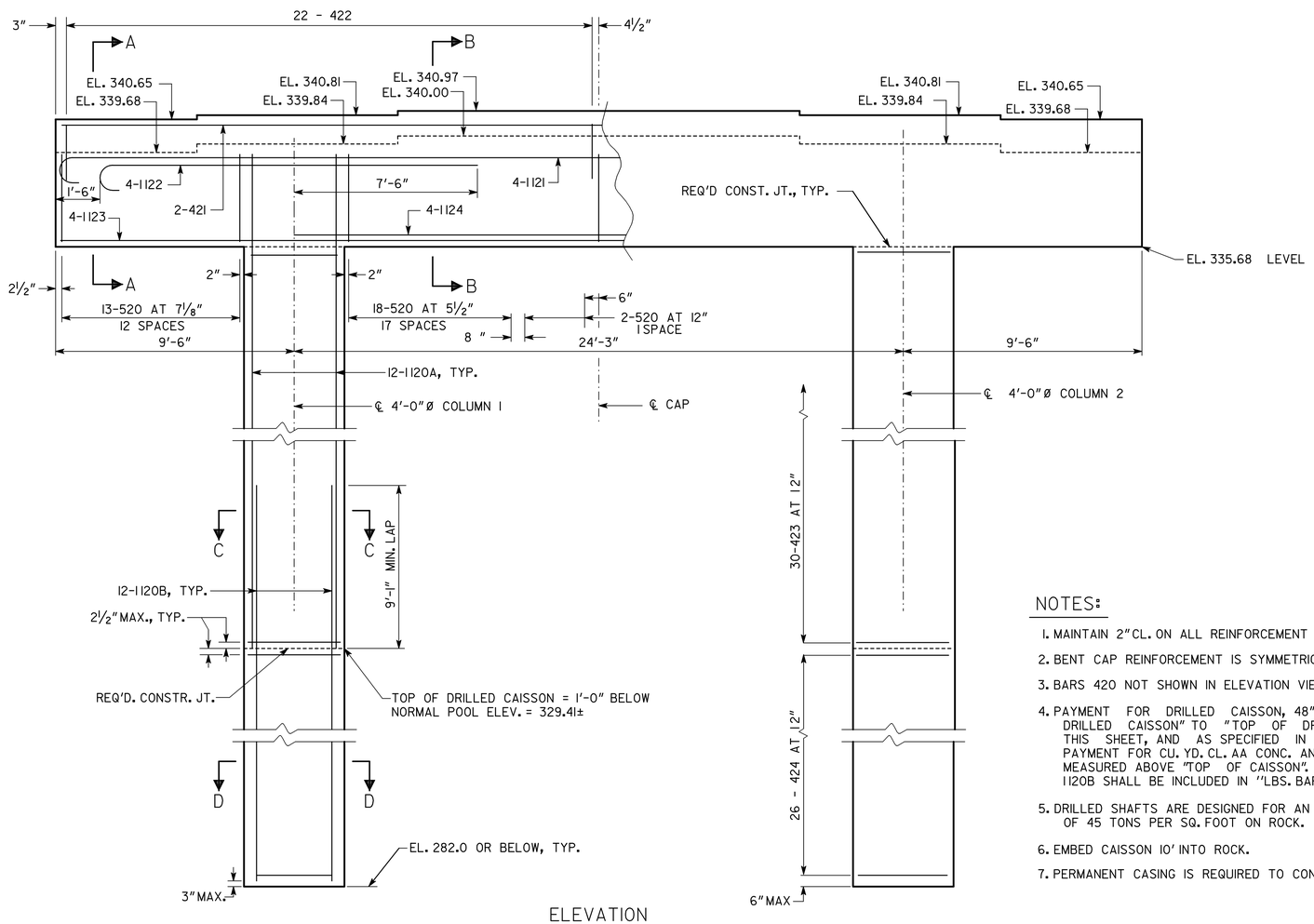

ELEVATION
(LOOKING AHEAD)

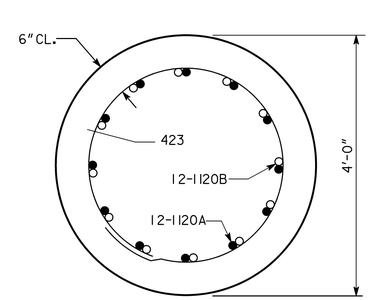

SECTION C-C

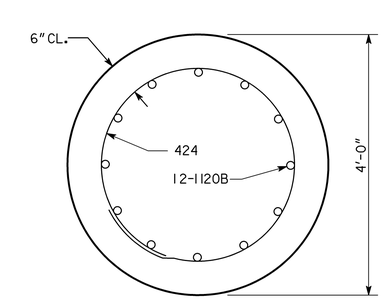

SECTION D-D

BARS TO BE BUNDLED IN THE CAP SHALL BE BUNDLED VERTICALLY

BUNDLING DETAIL, TYP.

NOTES:

1. MAINTAIN 2" CL. ON ALL REINFORCEMENT UNLESS OTHERWISE NOTED.
2. BENT CAP REINFORCEMENT IS SYMMETRICAL AROUND ℄ CAP.
3. BARS 420 NOT SHOWN IN ELEVATION VIEW.
4. PAYMENT FOR DRILLED CAISSON, 48"Ø SHALL BE FROM "BOTTOM OF DRILLED CAISSON" TO "TOP OF DRILLED CAISSON" AS DETAILED ON THIS SHEET, AND AS SPECIFIED IN SPECIAL PROVISION SECTION 524. PAYMENT FOR CU. YD. CL. AA CONC. AND LBS. BAR REINF. STEEL SHALL BE MEASURED ABOVE "TOP OF CAISSON". LAP LENGTH OF BARS 1120A WITH 1120B SHALL BE INCLUDED IN "LBS. BAR REIN. STEEL".
5. DRILLED SHAFTS ARE DESIGNED FOR AN ALLOWABLE END BEARING PRESSURE OF 45 TONS PER SQ. FOOT ON ROCK.
6. EMBED CAISSON 10' INTO ROCK.
7. PERMANENT CASING IS REQUIRED TO CONSTRUCT DRILLED SHAFTS IN WATER.

SUBSTRUCTURE QUANTITIES

ITEM	BENT 2	BENT 3
CY CLASS "AA" CONCRETE	56.6	60.9
LB BAR REINF STEEL	10321	10874

BRIDGE NO. 1

GEORGIA
DEPARTMENT OF TRANSPORTATION
ENGINEERING DIVISION-OFFICE OF BRIDGES AND STRUCTURES

INTERMEDIATE BENT 2 DETAILS
S.R. 47 OVER KEG CREEK
(CLARKS HILL / J. STROM THURMOND LAKE)
COLUMBIA CO. BRST0-0076-01(037)

REVISIONS	BY	DATE

DRAWING NO. 35-15
BRIDGE SHEET 15 OF 18

NO SCALE — JANUARY 2012

DESIGNED JLM — CHECKED RAG — REVIEWED WEI/WMD
DRAWN JLM — DESIGN GROUP RAG — APPROVED BFR

1 INCH WHEN PRINTED FULL SIZE

X.DGN

...\columbia 232305 final.dgn 11/26/2013 7:38:46 AM