STATE	PROJECT NUMBER	SHEET NO.	TOTAL SHEETS
GA.	BRST0-0076-01(037)	63	148

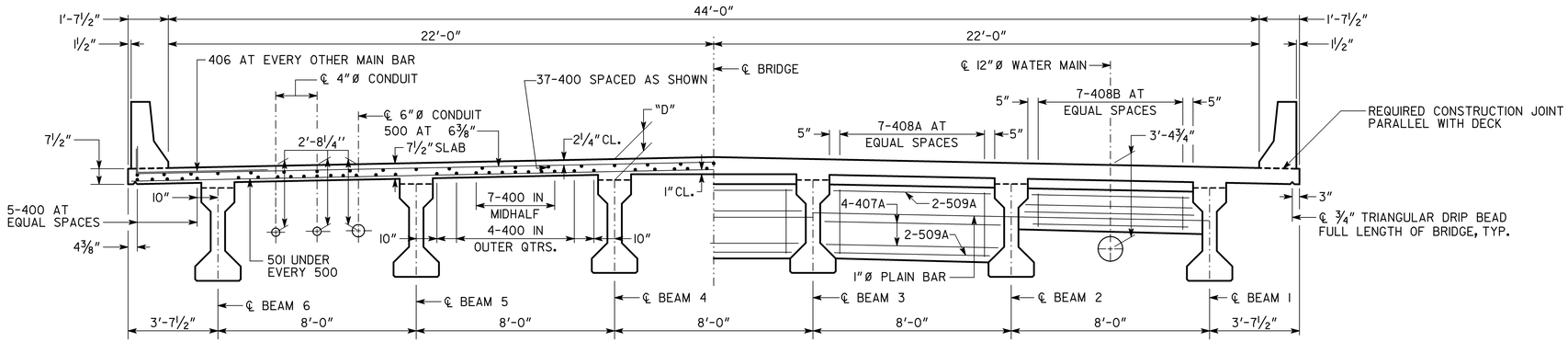

SECTION THRU SLAB
(LOOKING BACK)

SECTION THRU DIAPHRAGM
(LOOKING BACK)

DIMENSION "D" IS MEASURED FROM TOP OF SLAB TO TOP OF BEAMS AT CENTERLINE BEARING. VARY "D" BETWEEN BEARINGS TO COMPENSATE FOR DEAD LOAD DEFLECTION. MAINTAIN A CONSTANT SLAB THICKNESS OF 7½".
"D" = 9¾" ON SPAN 1
"D" = 9¼" ON SPAN 3

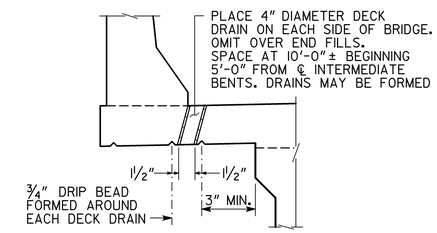

DECK DRAIN DETAIL

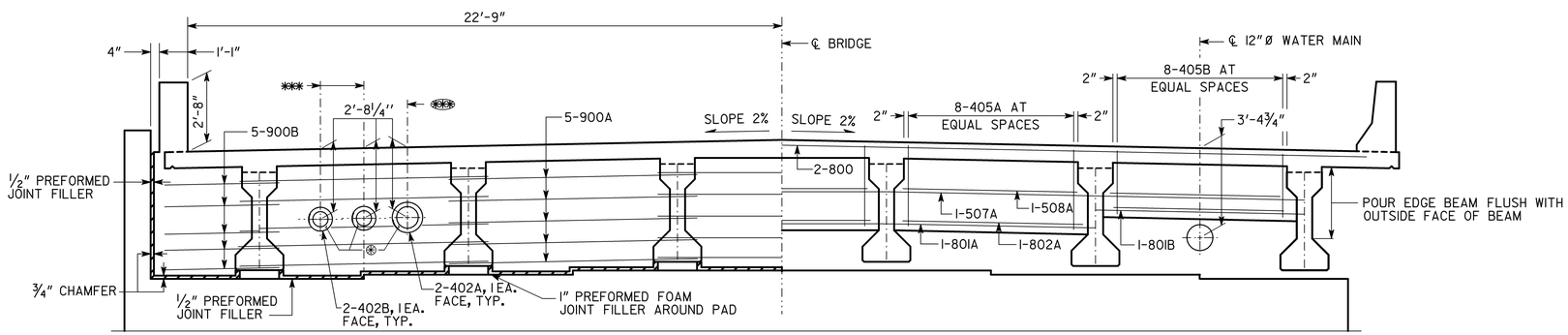

SECTION THRU ENDWALL
(LOOKING BACK)

SECTION THRU EDGE BEAM
(LOOKING BACK)

NOTES:

1. ❀ ℄ 15" Ø OPENING FOR 12" Ø WATER MAIN. CLIP OR SHIFT REBAR TO CLEAR OPENING.
2. ❀❀ ℄ 10" Ø OPENING FOR 6" Ø CONDUIT. CLIP OR SHIFT REBAR TO CLEAR OPENING.
3. ❀❀❀ ℄ 8"Ø OPENING FOR 4"Ø CONDUIT. CLIP OR SHIFT REBAR TO CLEAR COPENING.
4. ❀ PROVIDE CAULKING LAYER TO ENTIRE SURFACE AREA OF CASING THAT EXTENDS THROUGH END WALL AT EACH LOCATION. COST OF CAULKING SHALL BE INCLUDED IN OVERALL BID SUBMITTED.
5. WATER MAIN DETAILS ARE FOUND ON SHEET 8. HANGER DETAIL IS ON PAGE 9.
6. CONDUIT DETAILS ARE FOUND ON SHEETS 8 AND HANGER DETAILS ARE ON PAGE 9.

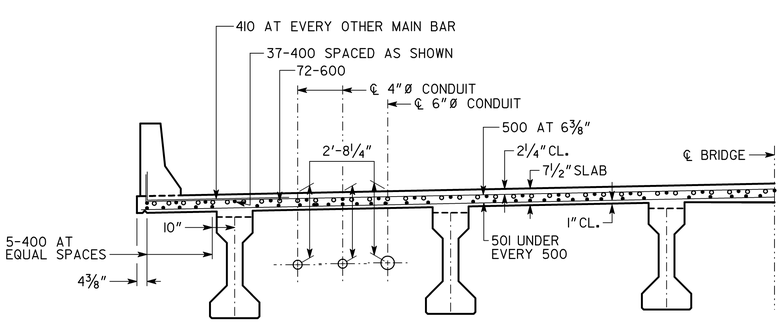

SECTION THRU SLAB AT INTERMEDIATE BENT
(LOOKING BACK)

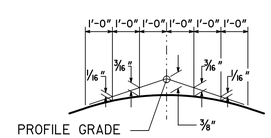

CROWN DETAIL
2% CROSS SLOPE
NO SCALE

BRIDGE NO. 1

GEORGIA
DEPARTMENT OF TRANSPORTATION
ENGINEERING DIVISION-OFFICE OF BRIDGES AND STRUCTURES

DECK SECTIONS SPAN 1 OR 3
S.R. 47 OVER KEG CREEK
(CLARKS HILL / J. STROM THURMOND LAKE)
COLUMBIA CO. BRST0-0076-01(037)

SCALE: ⅜" = 1'-0" UNLESS OTHERWISE NOTED JANUARY 2012

DRAWING NO. 35-006
BRIDGE SHEET 6 OF 18

REVISIONS | DATE | BY

DESIGNED JLM | CHECKED RAG | REVIEWED WEI/WMD
DRAWN EMM/JLM | DESIGN GROUP RAG | APPROVED BFR

DECK_SECTIONS.DGN