STATE	PROJECT NUMBER	SHEET NO.	TOTAL SHEETS
GA.	BRST0-0076-01(037)	61	148

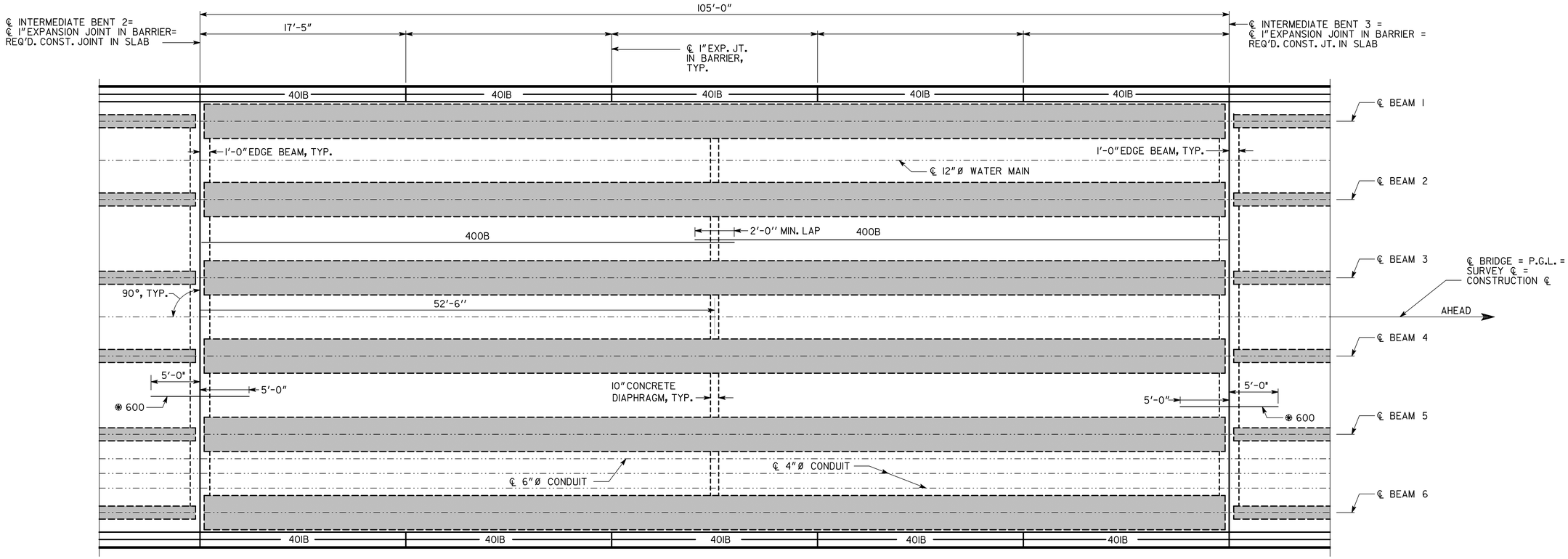

SPAN 2

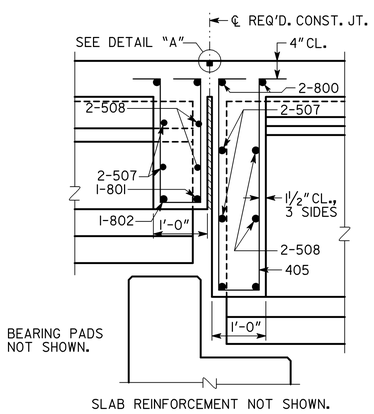

SECTION THRU EDGE BEAM

BENT 2 SHOWN
BENT 3 SIMILAR
NO SCALE

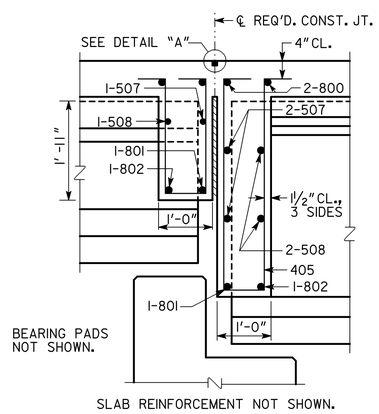

SECTION THRU EDGE BEAM AT WATER MAIN

BENT 2 SHOWN
BENT 3 SIMILAR
NO SCALE

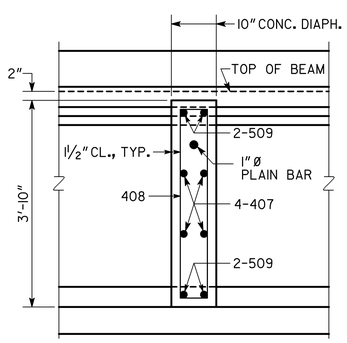

SLAB REINFORCEMENT NOT SHOWN.

SECTION THRU DIAPHRAGM

NO SCALE

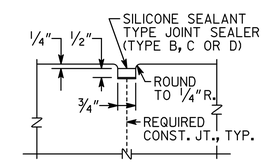

DETAIL "A"

NO SCALE

BRIDGE NO. 1

GEORGIA
DEPARTMENT OF TRANSPORTATION
ENGINEERING DIVISION-OFFICE OF BRIDGES AND STRUCTURES

DECK PLAN - SPAN 2
S.R. 47 OVER KEG CREEK
(CLARKS HILL / J. STROM THURMOND LAKE)
COLUMBIA CO. BRST0-0076-01(037)

SCALE: 3/16" = 1'-0" UNLESS NOTED — JANUARY 2012

DATE	REVISIONS	BY

DRAWING NO. 35-004
BRIDGE SHEET 4 OF 18

DESIGNED JLM — CHECKED RAG — REVIEWED WEI/WMD
DRAWN EMM/JLM — DESIGN GROUP RAG — APPROVED BFR

DECK PLANS.DGN

...\columbia 232305 final.dgn 11/26/2013 7:33:03 AM