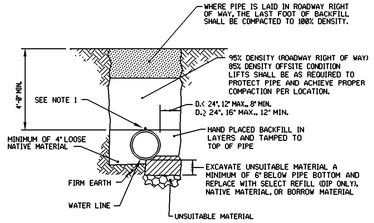

NOTE:
1. ALL PVC PIPE INSTALLATIONS REQUIRE 12 GAUGE LOCATING WIRE AND IDENTIFICATION TAPE FOR UNDERGROUND UTILITY LINE. ALL BEGINNING AND ENDING OF WATER LINES THAT ARE DIP (FOR A PORTION) IN A CASING OR NOT SHALL HAVE CONTINUOUS LOCATING WIRE FROM VALVE TO VALVE OR VALVE TO HYDRANT.
2. ALL COMPACTION DENSITIES SHALL BE IN ACCORDANCE WITH ASTM D698, STANDARD PROCTOR.

TYPE 3 TRENCH

TYPICAL WATER LINE TRENCH EXCAVATION DETAIL

NO SCALE

Approved By: ____ Date: ____
Revision No. ____ Date: ____
Revision No. ____ Date: ____
Revision No. ____ Date: ____
Revision No. ____ Date: ____
Revision No. ____ Date: ____

WATER UTILITY — COLUMBIA COUNTY — ENGINEERING DEPARTMENT

STANDARD DETAIL NUMBER 14.4.9-1

PIPE DIAMETER INCHES	DEAD END	90° BEND	45° BEND	22 1/2° BEND	11 1/4° BEND
4	3620	5179	2771	1412	718
6	7468	10958	5708	2908	1463
8	12868	18817	9843	5016	2522
10	19348	27351	14882	7544	3792
12	27368	38693	20940	10673	5365
14	36768	51987	28135	14339	7206
16	47540	67232	36386	18545	9322
18	59720	84457	45708	23296	11718
20	73288	103634	56086	28585	14369
24	104548	147842	80012	40779	20499
30	160840	227463	123182	62741	31538
36	230400	325835	176341	89875	45178

GAUGE PRESSURE = 200 P.S.I.

NOTES:
1. SUFFICIENT CONCRETE THRUST BLOCKING OR RESTRAINED JOINT PIPE SHALL BE INSTALLED TO ADEQUATELY SUSTAIN THE THRUST REACTIONS NOTED ABOVE FOR PIPE LINES TESTED TO 200 P.S.I. GAUGE PRESSURE. (SEE DETAIL 14.3.2.4-1 FOR RESTRAINED JOINT PIPE.) ALL BLOCKING SHALL BEAR AGAINST UNDISTURBED EARTH.
2. THE SOIL BEARING PRESSURE MAY BE ASSUMED AS 3000#/SF. THE CONTRACTOR IS RESPONSIBLE FOR VERIFYING SOIL BEARING PRESSURE FOR ALL INSTALLATIONS.

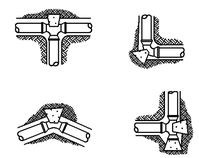

$A = hb = \frac{S_f T}{S_b}$

A = Area of Base
S_f = Safety Factor (1.5)
T = Thrust to be Restrained
S_b = Soil Bearing Pressure
h = Height
b = Width of Base

DESIGN LOADS FOR THRUST OR REACTION BLOCKING DETAIL

NO SCALE

Approved By: ____ Date: ____
Revision No. ____ Date: ____
Revision No. ____ Date: ____
Revision No. ____ Date: ____
Revision No. ____ Date: ____
Revision No. ____ Date: ____

WATER UTILITY — COLUMBIA COUNTY — ENGINEERING DEPARTMENT

STANDARD DETAIL NUMBER 14.7-1

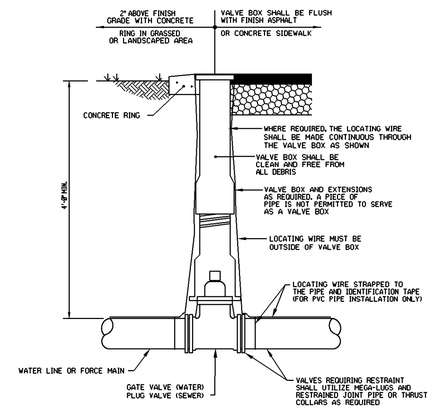

TYPICAL VALVE AND VALVE BOX DETAIL

NO SCALE

Approved By: ____ Date: ____
Revision No. ____ Date: ____
Revision No. ____ Date: ____
Revision No. ____ Date: ____
Revision No. ____ Date: ____
Revision No. ____ Date: ____

WATER UTILITY — COLUMBIA COUNTY — ENGINEERING DEPARTMENT

STANDARD DETAIL NUMBER 14.9-1

NOTE:
1. A CONTINUOUS RUN OF LOCATING WIRE IS REQUIRED WHERE THE WATER LINE IS PVC. THE RUN SHALL BE CONTINUOUS THROUGHOUT THE HYDRANT LEAD AND EXTEND UP TO THE TRAFFIC FLANGE AND BE EXPOSED. COMPLETE DIP WATER LINES DO NOT REQUIRE.
2. ALL HYDRANT INSTALLATIONS REQUIRE A REFLECTIVE MARKER BE PLACED IN PAVEMENT. SEE STANDARD DETAIL 11.15-1, 11.15-2 AND 11.15-3.

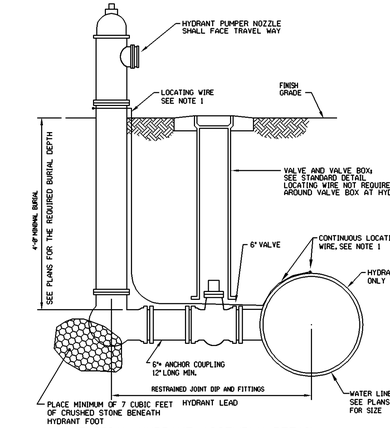

TYPICAL HYDRANT ASSEMBLY DETAIL (MINIMAL LEAD LENGTH)

NO SCALE

Approved By: CMH Date: 9-7-2011
Revision No. ____ Date: ____
Revision No. ____ Date: ____
Revision No. ____ Date: ____
Revision No. ____ Date: ____
Revision No. ____ Date: ____
Revision No. ____ Date: ____

WATER UTILITY — COLUMBIA COUNTY — ENGINEERING DEPARTMENT

STANDARD DETAIL NUMBER 14.15-1A

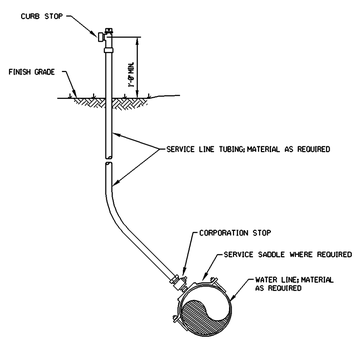

TYPICAL SAMPLE TAP DETAIL

NO SCALE

Approved By: ____ Date: ____
Revision No. 1 Date: 12-2010
Revision No. ____ Date: ____
Revision No. ____ Date: ____
Revision No. ____ Date: ____
Revision No. ____ Date: ____

WATER UTILITY — COLUMBIA COUNTY — ENGINEERING DEPARTMENT

STANDARD DETAIL NUMBER 14.21-2

GPLN

GEORGIA
DEPARTMENT OF TRANSPORTATION

REVISION DATES		

STATE OF GEORGIA
DEPARTMENT OF TRANSPORTATION
OFFICE: TENNILLE DISTRICT
UTILITY PLANS
SR 47 OVER KEG CREEK
DRAWING No. 24-004