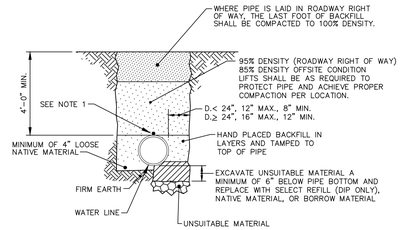

NOTE:
1. ALL PVC PIPE INSTALLATIONS REQUIRE 12 GAUGE LOCATING WIRE AND IDENTIFICATION TAPE FOR UNDERGROUND UTILITY LINE. ALL BEGINNING AND ENDING OF WATER LINES THAT ARE DIP (FOR A PORTION) IN A CASING OR NOT SHALL HAVE CONTINUOUS LOCATING WIRE FROM VALVE TO VALVE OR VALVE TO HYDRANT.
2. ALL COMPACTION DENSITIES SHALL BE IN ACCORDANCE WITH ASTM D698, STANDARD PROCTOR.

TYPE 3 TRENCH

TYPICAL WATER LINE TRENCH EXCAVATION DETAIL

NO SCALE

Approved By: ____ Date: ____
Revision No. ____ Date: ____
Revision No. ____ Date: ____
Revision No. ____ Date: ____
Revision No. ____ Date: ____
Revision No. ____ Date: ____

WATER UTILITY — COLUMBIA COUNTY GEORGIA — ENGINEERING DEPARTMENT

STANDARD DETAIL NUMBER 14.4.9–1

PIPE DIAMETER INCHES	DEAD END	90° BEND	45° BEND	22 1/2° BEND	11 1/4° BEND
4	3620	5119	2771	1412	710
6	7460	10550	5710	2910	1463
8	12860	18187	9843	5016	2522
10	19340	27351	14802	7544	3792
12	27360	38693	20940	10673	5365
14	36760	51987	28135	14339	7208
16	47540	67232	36386	18545	9322
18	59720	84457	45708	23296	11710
20	73280	103634	56086	28585	14369
24	104540	147842	80012	40779	20499
30	160840	227463	123102	62741	31538
36	230400	325835	176341	89875	45178

GAUGE PRESSURE = 200 P.S.I.

NOTES:
1. SUFFICIENT CONCRETE THRUST BLOCKING OR RESTRAINED JOINT PIPE SHALL BE INSTALLED TO ADEQUATELY SUSTAIN THE THRUST REACTIONS NOTED ABOVE FOR PIPE LINES TESTED TO 200 P.S.I. GAUGE PRESSURE. (SEE DETAIL 14.3.2.4–1 FOR RESTRAINED JOINT PIPE.) ALL BLOCKING SHALL BEAR AGAINST UNDISTURBED EARTH.
2. THE SOIL BEARING PRESSURE MAY BE ASSUMED AS 3000#/SF. THE CONTRACTOR IS RESPONSIBLE FOR VERIFYING SOIL BEARING PRESSURE FOR ALL INSTALLATIONS.

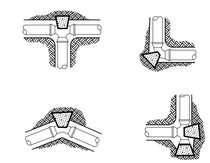

$$A = hb = \frac{S_f T}{S_b}$$

A = Area of Base
S_f = Safety Factor (1.5)
T = Thrust to be Restrained
S_b = Soil Bearing Pressure
h = Height
b = Width of Base

DESIGN LOADS FOR THRUST OR REACTION BLOCKING DETAIL

NO SCALE

Approved By: ____ Date: ____
Revision No. ____ Date: ____
Revision No. ____ Date: ____
Revision No. ____ Date: ____
Revision No. ____ Date: ____
Revision No. ____ Date: ____

WATER UTILITY — COLUMBIA COUNTY GEORGIA — ENGINEERING DEPARTMENT

STANDARD DETAIL NUMBER 14.7–1

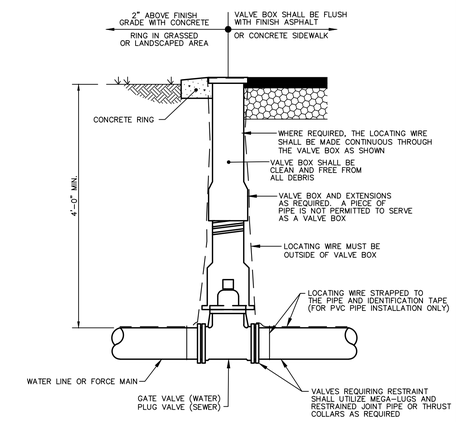

TYPICAL VALVE AND VALVE BOX DETAIL

NO SCALE

Approved By: ____ Date: ____
Revision No. ____ Date: ____
Revision No. ____ Date: ____
Revision No. ____ Date: ____
Revision No. ____ Date: ____
Revision No. ____ Date: ____

WATER UTILITY — COLUMBIA COUNTY GEORGIA — ENGINEERING DEPARTMENT

STANDARD DETAIL NUMBER 14.9–1

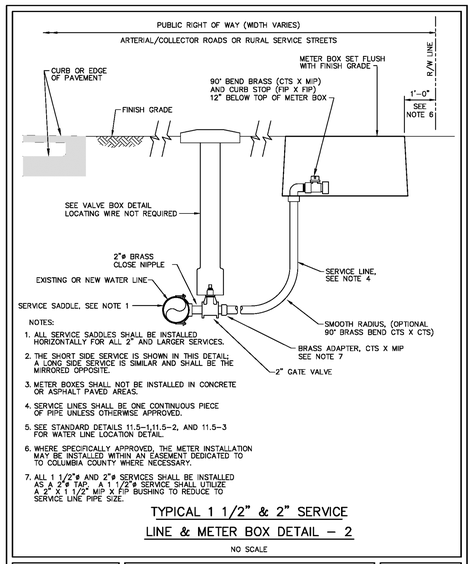

NOTES:
1. ALL SERVICE SADDLES SHALL BE INSTALLED HORIZONTALLY FOR ALL 2" AND LARGER SERVICES.
2. THE SHORT SIDE SERVICE IS SHOWN IN THIS DETAIL; A LONG SIDE SERVICE IS SIMILAR AND SHALL BE THE MIRRORED OPPOSITE.
3. METER BOXES SHALL NOT BE INSTALLED IN CONCRETE OR ASPHALT PAVED AREAS.
4. SERVICE LINES SHALL BE ONE CONTINUOUS PIECE OF PIPE UNLESS OTHERWISE APPROVED.
5. SEE STANDARD DETAILS 11.5–1,11.5–2, AND 11.5–3 FOR WATER LINE LOCATION DETAIL.
6. WHERE SPECIFICALLY APPROVED, THE METER INSTALLATION MAY BE INSTALLED WITHIN AN EASEMENT DEDICATED TO TO COLUMBIA COUNTY WHERE NECESSARY.
7. ALL 1 1/2"ø AND 2"ø SERVICES SHALL BE INSTALLED AS A 2"ø TAP. A 1 1/2"ø SERVICE SHALL UTILIZE A 2" X 1 1/2" MIP X FIP BUSHING TO REDUCE TO SERVICE LINE PIPE SIZE.

TYPICAL 1 1/2" & 2" SERVICE LINE & METER BOX DETAIL – 2

NO SCALE

Approved By: ____ Date: ____
Revision No. ____ Date: ____
Revision No. ____ Date: ____
Revision No. ____ Date: ____
Revision No. ____ Date: ____
Revision No. ____ Date: ____

WATER UTILITY — COLUMBIA COUNTY GEORGIA — ENGINEERING DEPARTMENT

STANDARD DETAIL NUMBER 14.10–2A

NOTE:
1. A CONTINUOUS RUN OF LOCATING WIRE IS REQUIRED WHERE THE WATER LINE IS PVC. THE RUN SHALL BE CONTINUOUS THROUGHOUT THE HYDRANT LEAD AND EXTEND UP TO THE TRAFFIC FLANGE AND BE EXPOSED. COMPLETE DIP WATER LINES DO NOT REQUIRE.
2. ALL HYDRANT INSTALLATIONS REQUIRE A REFLECTIVE MARKER BE PLACED IN PAVEMENT. SEE STANDARD DETAIL 11.5–1, 11.5–2 AND 11.5–3.

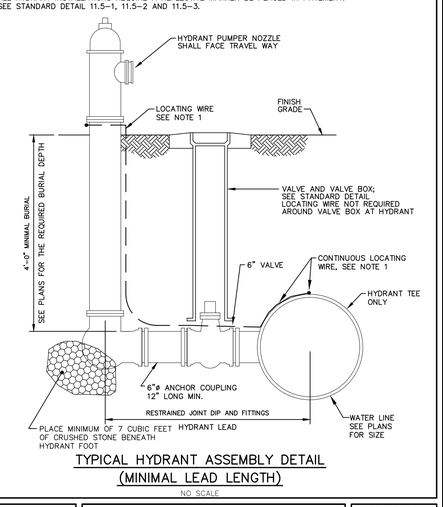

TYPICAL HYDRANT ASSEMBLY DETAIL (MINIMAL LEAD LENGTH)

NO SCALE

Approved By: DMH Date: 11–7–2011
Revision No. ____ Date: ____
Revision No. ____ Date: ____
Revision No. ____ Date: ____
Revision No. ____ Date: ____
Revision No. ____ Date: ____

WATER UTILITY — COLUMBIA COUNTY GEORGIA — ENGINEERING DEPARTMENT

STANDARD DETAIL NUMBER 14.15–1A

USE ON CONSTRUCTION

EXISTING WATER LINE (TO RETAIN)	—W—W—W—
EXISTING WATER LINE (TO BE ABANDONED)	–X–W–X–W–X–W–X–W–
PROPOSED WATER LINE	—W——W——W—
EXISTING FIBER OPTIC LINE	—T—T—T—
EXISTING WATER METER	W
PROPOSED WATER METER	W
EXISTING WATER VALVE	W
PROPOSED WATER VALVE	W
EXISTING COLUMBIA COUNTY FIBER OPTIC HANDHOLE	H
EXISTING FIRE HYDRANT	
PROPOSED FIRE HYDRANT	

SCALE IN FEET
0 20 40 80

REVISION DATES		
REVISED		
6/2/2014		

PROPOSED PASSING LANE ON SR 47 SOUTHBOUND FROM CR 46 TO JUST NORTH OF KEG CREEK

COLUMBIA COUNTY WATER UTILITY

CCWU UTILITY RELOCATION PLANS
UTILITY DETAILS

STP00-0076-01(028)
COLUMBIA COUNTY

DRAWING No. 44-009

X:\GDOT PROJECTS\PI 2313350 SR 47 Ridge Rd to Keg Creek Dr\ACTIVE cad files\PI 2313350 SR 47 Ridge Rd to Keg Creek Detail Sheets.dwg, 9/5/2013 1:06:03 PM