| STATE | PROJECT NUMBER | SHEET NO. | TOTAL SHEETS |
|---|---|---|---|
| GA. | STP00-00MS-00 (001) | 176 | 239 |

## DETAILS OF DROP INLET WITH DOUBLE WEIR OPENING

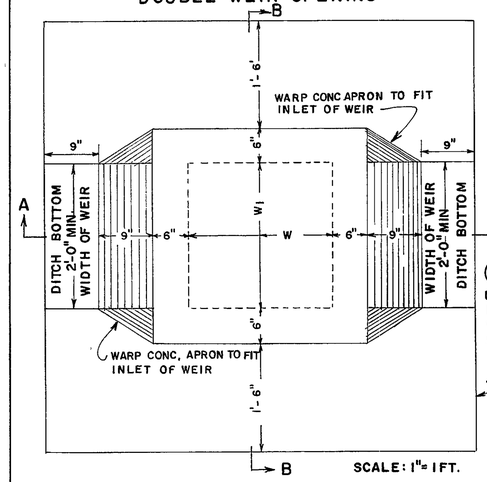


## ISOMETRIC VIEW
(SINGLE WEIR OPENING SHOWN)

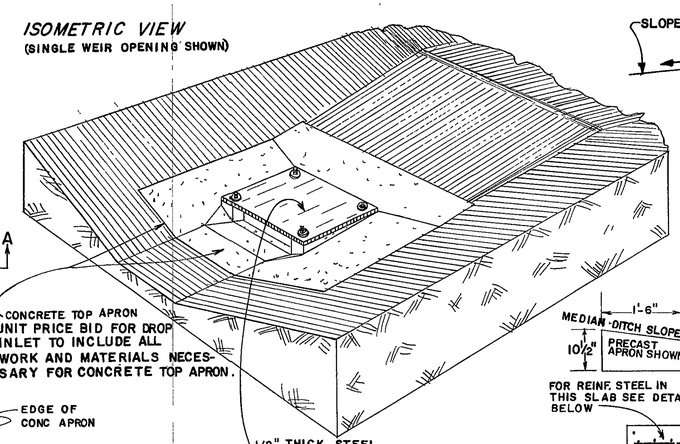


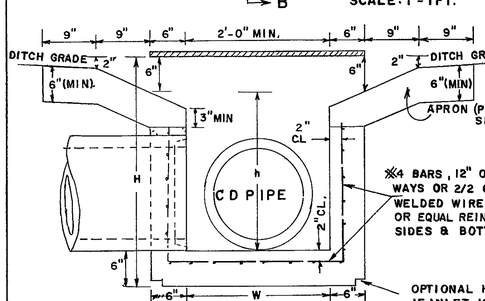


SECTION A-A
(CONC. BOX)

SCALE: 1" = 1 FT

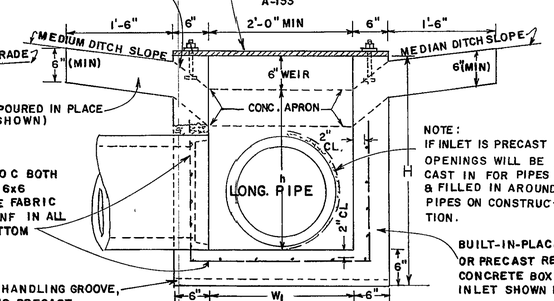


SECTION B-B
(CONC BOX)

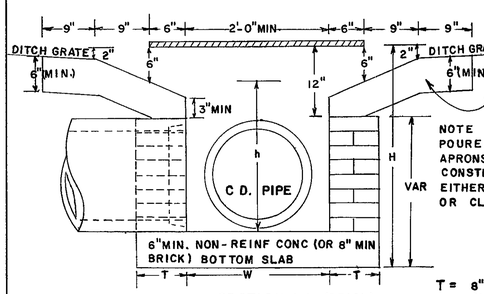


SECTION A-A (BRICK)

T = 8" (MIN.) EXCEPT WHERE H IS OVER 10 FT. SEE DETAIL AT RIGHT.

NOTE
POURED IN PLACE APRONS MAY BE CONSTRUCTED WITH EITHER CLASS "A" OR CLASS "B" CONC.

DETAIL AND ARRANGEMENT OF LADDER BARS

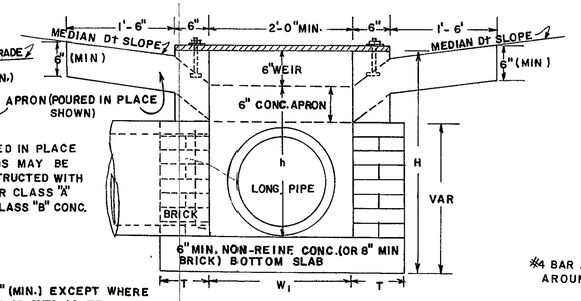


SECTION B-B (BRICK)

SCALE: 1" = 1 FT

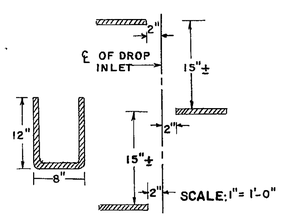


LADDER BARS ARE REQUIRED IN ALL INLETS, WHERE h=OVER 4'-0". NUMBER AND LOCATION OF LADDER BARS TO BE AS DIRECTED BY THE ENGINEER. AN ALTERNATE STEP MAY BE SUBSTITUTED, IF APPROVED BY THE LABORATORY.

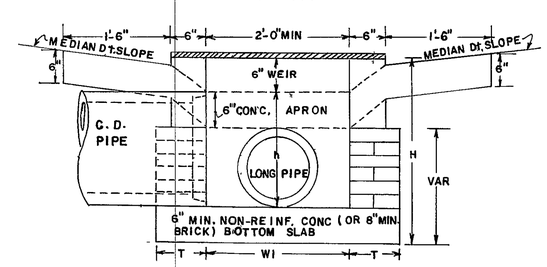


SECTION B-B MODIFIED

(C.D. PIPE IS 6" MIN. LARGER THAN LONG. PIPE)

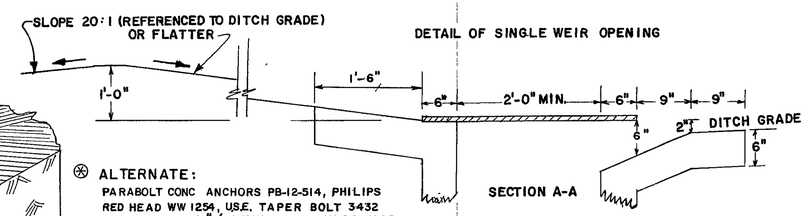


DETAIL OF SINGLE WEIR OPENING

⊛ ALTERNATE:
PARABOLT CONC ANCHORS PB-12-514, PHILIPS RED HEAD WW 1254, USE. TAPER BOLT 3432 OR AN EQUAL 1/2" ø ANCHOR BOLT MAY BE USED TO SECURE THE STEEL PLATE

## DROP INLET WITH ENLARGED BASE

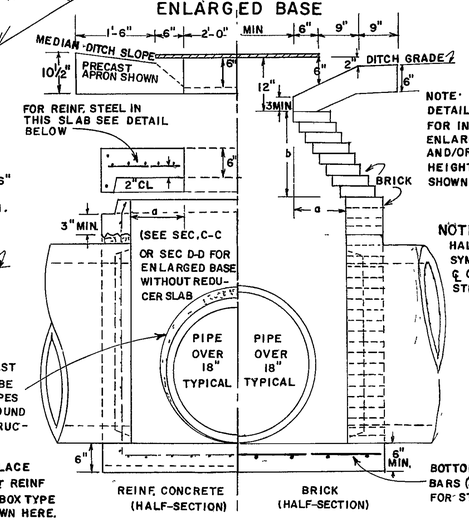


NOTE:
DETAILS NOT SHOWN FOR INLETS WITH ENLARGED BASES AND/OR ADDITIONAL HEIGHT WILL BE AS SHOWN ELSEWHERE

NOTE:
HALF-SECTIONS ARE SYMMETRICAL ABOUT ℄ OF THE TYPE CONSTRUCTION UTILIZED

NO SCALE

BOTTOM SLAB REINF. NO. 4 BARS @ 12" O.C. BOTH WAYS FOR STRUCTURES SHOWN HERE.

## DROP INLET WITH ADDITIONAL HEIGHT
(DETAILS SHOWN ARE TYPICAL BOX ENCLOSURE FOR PIPE MAY BE BRICK MASONRY WITH PRECAST RISERS. ALSO SEE STD. 1040 FOR ADAPTERS USED WITH CIRCULAR ALTERNATES).

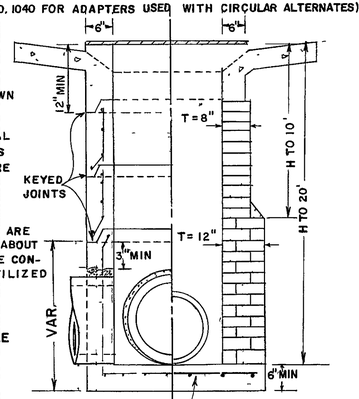


| BRICK WALL THICKNESS | |
|---|---|
| H | T |
| to 10' | 8" |
| 10' to 20' | 12" |
| 20' to 30' | 16" |

## REINFORCING FOR OPTIONAL PRECAST APRON
(MAY BE USED WITH A PRECAST OR BUILT-IN-PLACE INLET)

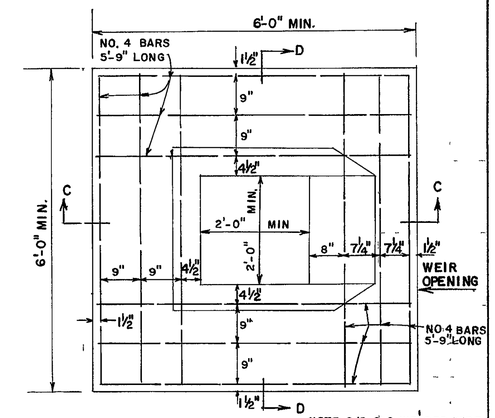


NOTE 2/2, 6x6 WELDED WIRE FABRIC WITH 2 NO 4 BARS 5'-9" LONG ON EACH SIDE MAY BE USED AS AN ALTERNATIVE

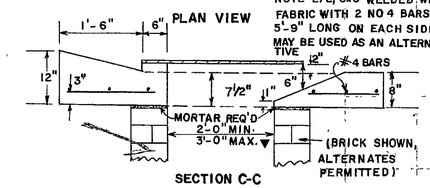


SECTION C-C

NOTE: WHEN USING PRECAST APRON, THE PLATE, BOLTS & OTHER REQUIREMENTS SHALL CONFORM TO THAT SHOWN FOR POURED IN PLACE APRON.

▼ MAXIMUM W OR W1 PERMITTED WITH PRECAST APRON WITHOUT REDUCER SLAB

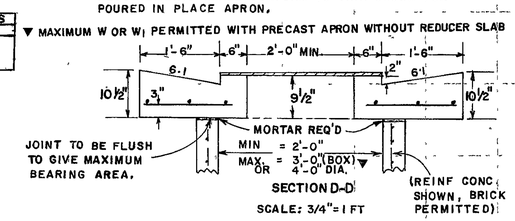


SECTION D-D
SCALE: 3/4" = 1 FT

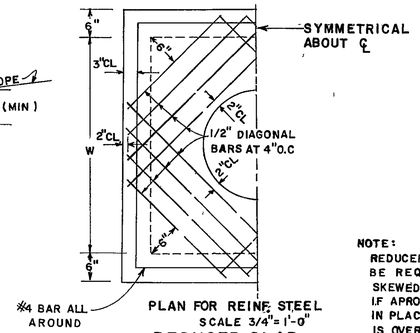


PLAN FOR REINF. STEEL
SCALE 3/4" = 1'-0"

## REDUCER SLAB
(HALF-SECTION)

## TYPICAL PLAN FOR SKEWED PIPE

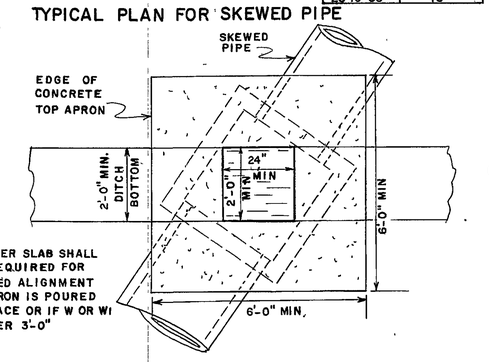


NOTE:
REDUCER SLAB SHALL BE REQUIRED FOR SKEWED ALIGNMENT IF APRON IS POURED IN PLACE OR IF W OR W1 IS OVER 3'-0"

## TYPICAL DROP INLET DIMENSIONS ✱✱

| PIPE SIZE | BRICK MASONRY | | | | | | | REINF. CONCRETE ✱ | | | |
|---|---|---|---|---|---|---|---|---|---|---|---|
| | MIN. W OR W1 | MIN. H | MIN h | a (MAX.) | b (MIN.) | MODIFIED MIN H | MODIFIED MIN h | MIN W OR W1 | MIN H | MIN. h | a (MAX) |
| 15" | 2'-0" | 3'-1" | 2'-1" | — | — | 2'-7 1/2" | 1'-7 1/2" | 2'-0" | 3'-2" | 2'-2" | — |
| 18" | 2'-3" | 3'-10" | 2'-10" | 1 1/2" | 2 1/16" | 2'-11" | 1'-11" | 2'-3" | 3'-5" | 2'-5" | — |
| 24" | 2'-10" | 4'-11" | 3'-11" | 5" | 8 5/8" | 3'-6" | 2'-6" | 3'-0" | 4'-10" | 3'-10" | 6" |
| 30" | 3'-5" | 6'-0" | 5'-0" | 8 1/2" | 1'-2 11/16" | 4'-1" | 3'-1" | 3'-6" | 5'-5" | 4'-5" | 9" |
| 36" | 4'-0" | 7'-1" | 6'-1" | 1'-0" | 1'-8 3/4" | — | — | 4'-0" | 6'-0" | 5'-0" | 1'-0" |
| 42" | 4'-7" | 8'-6" | 7'-2" | 1'-3 1/2" | 2'-2 3/4" | — | — | 4'-6" | 6'-7" | 5'-7" | 1'-3" |
| 48" | 5'-2" | 9'-7" | 8'-3 | 1'-7" | 2'-8 7/8" | — | — | 5'-0" | 7'-2" | 6'-2" | 1'-6" |

✱ BUILT-IN-PLACE OR PRECAST BOX

✱✱ DIMENSIONS ARE BASED UPON TYPICAL OUTSIDE DIAMETERS OF CONCRETE PIPE AND MAY BE VARIED IF CONDITIONS PERMIT, AND THE VARIED DIMENSIONS ARE SHOWN IN THE PLANS OR SPECIFIED BY THE ENGINEER. DIMENSIONS "a" ARE BASED UPON 2'-0" WEIR OPENING. MINIMUM H AND h ARE BASED UPON LARGEST PIPE INVOLVED. BOX ENCLOSURE FOR PIPE DOES NOT HAVE TO BE SQUARE. W AND W1 DIMENSIONS MAY DIFFER. (DIMENSIONS HAVE BEEN SPECIFIED FOR BOX SHAPED INLETS. SEE STD. 1040 FOR DIMENSIONS OF CIRCULAR ALTERNATES)

## GENERAL NOTES:

1. SPECIFICATIONS: GA. STANDARD, CURRENT EDITION, & SUPPLEMENTS THERETO.
2. SEE STD 9031-L FOR ADDITIONAL DETAILS WHERE INLET IS CONSTRUCTED ON BOX CULVERT.
3. SEE STD. 1040 FOR CIRCULAR PRECAST ALTERNATES.
4. PRECAST ON BRICK MASONRY: BRICK CONSTRUCTION SHALL EXTEND 6"± ABOVE TOP OF PIPE. JOINTS BETWEEN PRECAST & BRICK SECTIONS SHALL BE FLUSH OR CONC. FILLED TO GIVE MAX. BEARING AREA.
5. TYPICAL TREATMENT FOR SKEWED PIPES:
   (a) WITH PRECAST APRON — CONSTRUCT BOX WITH WALLS PERPENDICULAR TO PIPE AND SET PRECAST APRON PARALLEL TO DITCH AND SKEWED RELATIVE TO PIPE OR USE CIRCULAR SECTIONS (STD.1040)
   (b) WITH BUILT-IN-PLACE APRON — CONSTRUCT BOX AS DESCRIBED IN (a) AND USE REDUCER SLAB OR INCREASE W OR W1 DIMENSIONS AS NECESSARY OR USE CIRCULAR SECTIONS (STD 1040)

| BY | REVISION | GEN. REV. | DATE |
|---|---|---|---|
| R.M.U. | | | 4-17-96 |

# DEPARTMENT OF TRANSPORTATION
STATE OF GEORGIA

# STANDARD MEDIAN DROP INLET
(PRECAST OR BUILT-IN-PLACE) & CONCRETE APRON

SCALE AS SHOWN — REV & REDR. AUGUST 26, 1981

DES. 2-67
REV. R.M.U.
TRA. G.M.E.
CHK. R.K.C.

(SUBMITTED) Floyd E. Hardy
STATE ROAD & AIRPORT DESIGN ENGR
(APPROVED) Thomas D. Moseley
STATE HIGHWAY ENGINEER

NUMBER 9031-S

FORM EF3