STATE	PROJECT NUMBER	SHEET NO.	TOTAL SHEETS
GA.	E0500-0545-00(018)	352	431

OFFSET NOTE:
THE POST OFFSET DIMENSIONS ARE GIVEN TO THE CENTER OF THE TRAFFIC FACE OF THE BLOCKOUTS., EXCEPT AT THE FIRST TWO POSTS, WHERE THE DIMENSION IS TO THE CENTER OF THE TRAFFIC FACE OF THE POST. OFFSET POINTS ARE TO BE LOCATED BY CHORD MEASUREMENTS AT THE BACK OF THE RAIL EQUAL TO THE NOMINAL POST SPACINGS SHOWN. POSTS ARE TO BE SET APPROXIMATELY RADIAL TO THE RAILING AT EACH POST LOCATION.

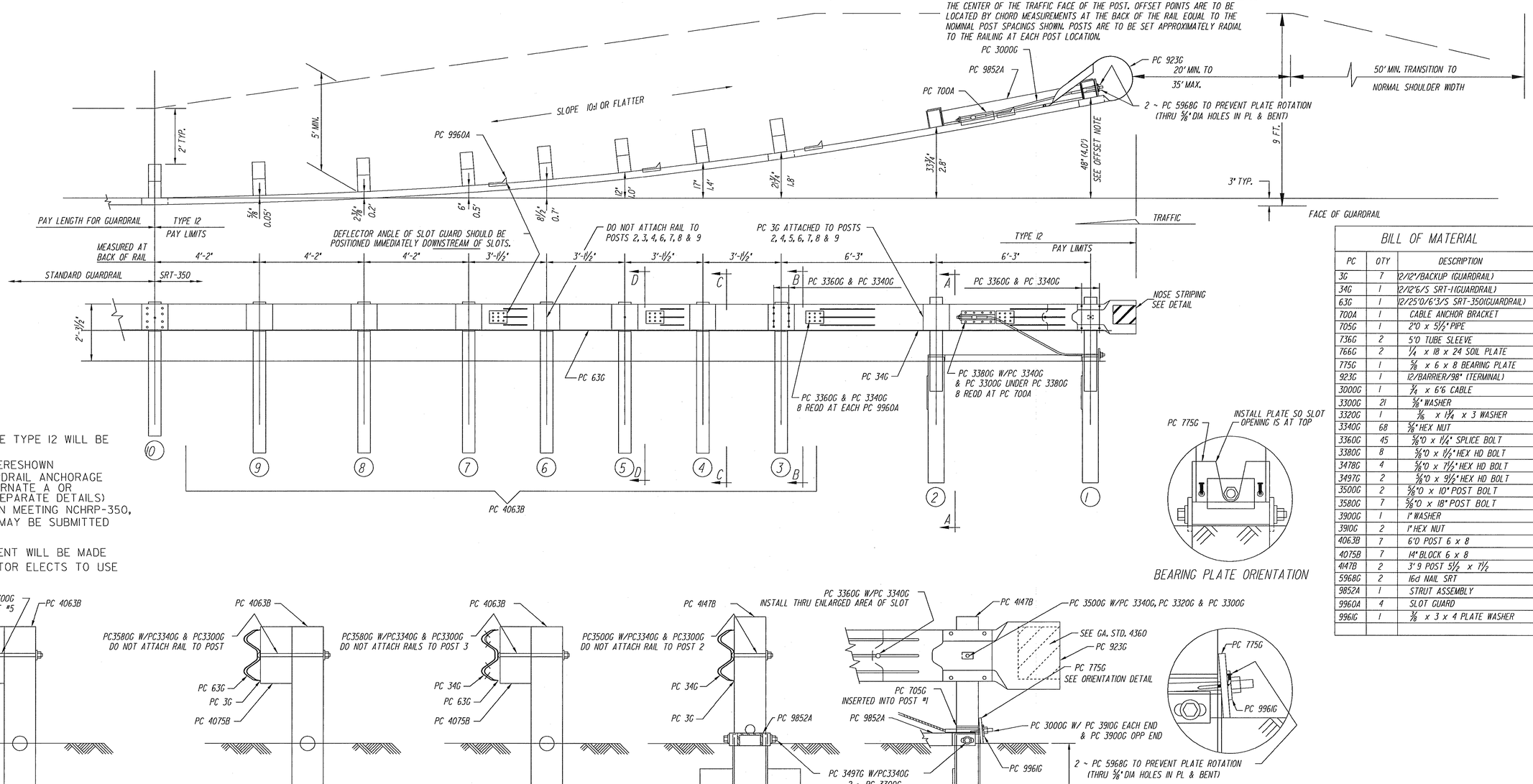

BEARING PLATE ORIENTATION

BILL OF MATERIAL

PC	QTY	DESCRIPTION
3G	7	12/12'1/BACKUP (GUARDRAIL)
34G	1	12/12'6/S SRT-1(GUARDRAIL)
63G	1	12/25'0/6'3/S SRT-350(GUARDRAIL)
700A	1	CABLE ANCHOR BRACKET
705G	1	2'0 x 5½" PIPE
736G	2	5'0 TUBE SLEEVE
766G	2	¼ x 18 x 24 SOIL PLATE
775G	1	⅝ x 6 x 8 BEARING PLATE
923G	1	12/BARRIER/98" (TERMINAL)
3000G	1	¾ x 6'6 CABLE
3300G	21	⅝" WASHER
3320G	1	7/16 x 1¾ x 3 WASHER
3340G	68	⅝" HEX NUT
3360G	45	⅝"0 x 1¼" SPLICE BOLT
3380G	8	⅝"0 x 1½" HEX HD BOLT
3478G	4	⅝"0 x 7½" HEX HD BOLT
3497G	2	⅝"0 x 9½" HEX HD BOLT
3500G	2	⅝"0 x 10" POST BOLT
3580G	7	⅝"0 x 18" POST BOLT
3900G	1	1" WASHER
3910G	2	1" HEX NUT
4063B	7	6'0 POST 6 x 8
4075B	7	14" BLOCK 6 x 8
4147B	2	3'9 POST 5½ x 7½
5968G	2	16d NAIL SRT
9852A	1	STRUT ASSEMBLY
9960A	4	SLOT GUARD
9961G	1	⅜ x 3 x 4 PLATE WASHER

NOTE:

GUARDRAIL ANCHORAGE TYPE 12 WILL BE EITHER
(a)SYRO SRT-350 AS HERESHOWN
(b)SPECIAL DESIGN GUARDRAIL ANCHORAGE WITHOUT FLARE, ALTERNATE A OR ALTERNATE B (SEE SEPARATE DETAILS)
(c)AN ALTERNATE DESIGN MEETING NCHRP-350, TL-3 REQUIREMENTS MAY BE SUBMITTED FOR DOT APPROVAL

NO ADDITIONAL PAYMENT WILL BE MADE WHERE THE CONTRACTOR ELECTS TO USE (b) OR (c).

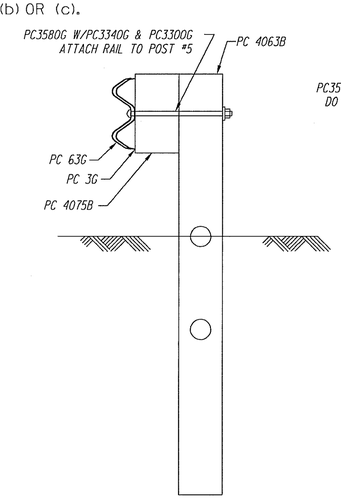

SECTION "D-D"
(@ POST #5)

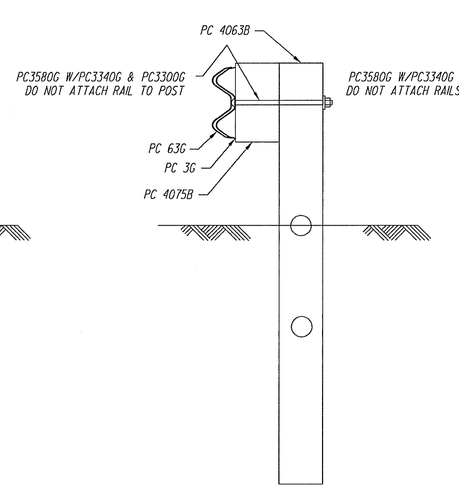

SECTION "C-C"
(@ POSTS #4, #6, #7, #8 & #9)

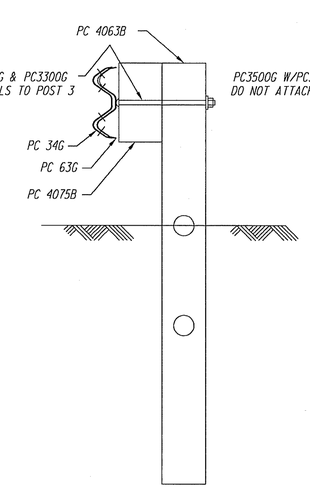

SECTION "B-B"
(@ POST #3)

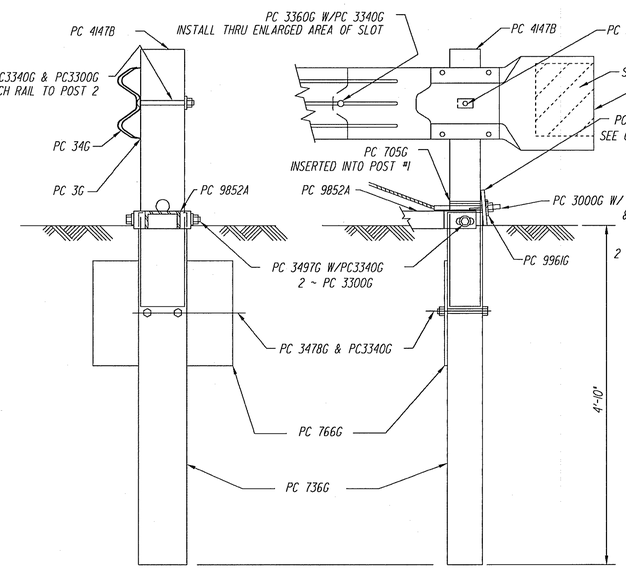

SECTION "A-A"
(@ POST #2)

ENLARGED VIEW @ POST #1

DETAILS NOT SHOWN WILL BE ACCORDING TO THE MANUFACTURERS REQUIREMENTS AND AS APPROVED BY THE ENGINEER. THE CONTRACTOR SHALL OBTAIN A COPY OF THE MANUFACTURES INSTALLATION INSTRUCTIONS.

DATE	REVISION	BY
4-10-06	REMOVED NOSE STRIPING DETAIL-SEE GA. STD. 4360	G.L.O.
7-31-97	REVISED NOTES	R.M.U.

DEPARTMENT OF TRANSPORTATION
STATE OF GEORGIA

STANDARD

GUARDRAIL ANCHORAGE TYPE 12

NO SCALE — JULY 1997

DES. ____ DRW. ____ TRA. ____ CHK. ____
(SUBMITTED) STATE ROAD & AIRPORT DESIGN ENGINEER
(APPROVED) CHIEF ENGINEER

NUMBER 4040