STATE	PROJECT NUMBER	SHEET NO.	TOTAL SHEETS
GA.	EDS00-0545-00(018)	335	431

CATCH BASIN TYPE 1.

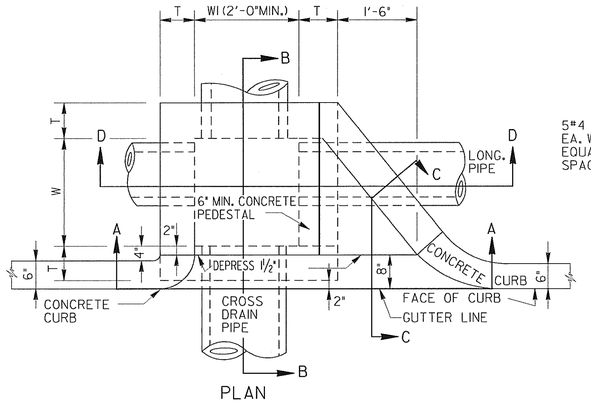

PLAN

PRECAST CONCRETE SLAB

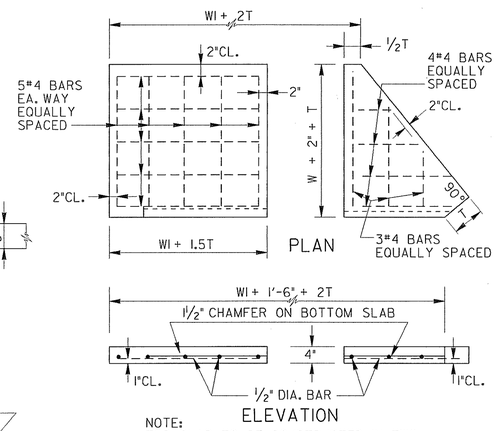

PLAN

ELEVATION

NOTE:
TOP SLAB TO BE CONSTRUCTED IN TWO SECTIONS AS SHOWN.

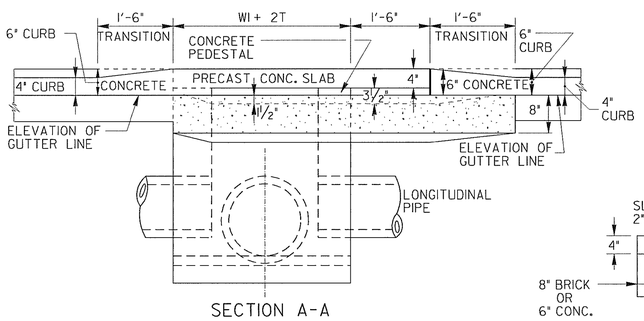

SECTION A-A

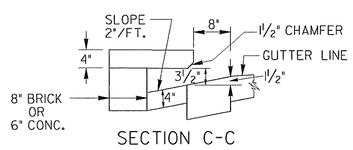

SECTION C-C

NOTE:
IF CATCH BASIN IS USED IN 4' MEDIAN WITH 4" CURB HEIGHT, SLOPE TOP SLAB 2" BACK. BACK TOP OF SLAB TO HAVE SAME ELEVATION AS TOP OF CURB.

T= 8" FOR BRICK MASONRY WALLS OR BOTTOM
T= 6" CONCRETE WALLS OR BOTTOM

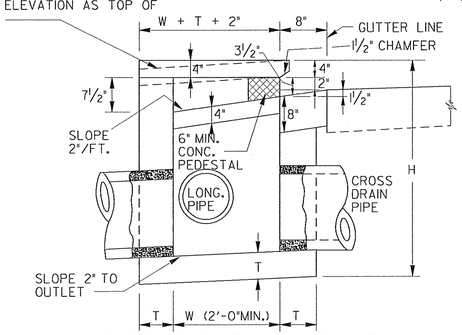

SECTION B-B (BUILT IN PLACE)
SAME FOR TYPE 2

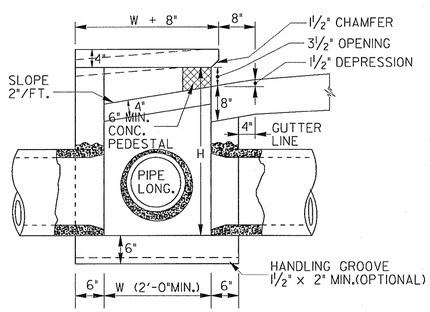

SECTION B-B (PRECAST)
SAME FOR TYPE 2

MIN. DIMENSIONS-TP. 1 OR 2		
PIPE SIZE	W OR WI	MIN. H
10"	2'-0"	3'-0"
15"	2'-0"	3'-3"
18"	2'-3"	3'-9"

CATCH BASIN TYPE 2

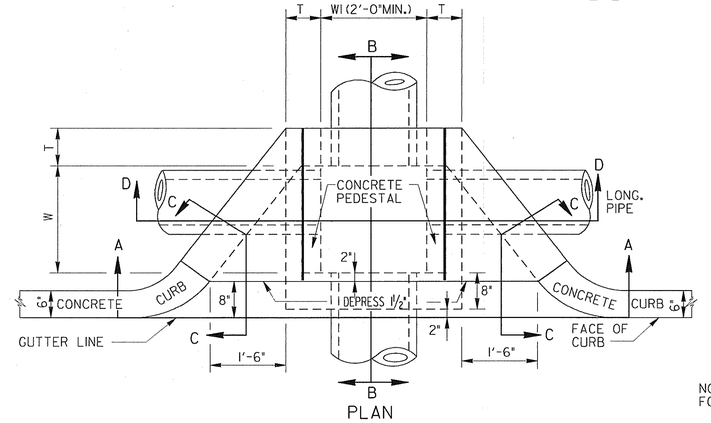

PLAN

T= 8" FOR BRICK MASONRY WALLS OR BOTTOM
T= 6" CONCRETE WALLS OR BOTTOM

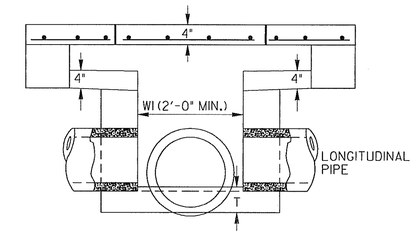

SECTION D-D

NOTE:
FOR SECTION B-B AND SECTION C-C SEE CATCH BASIN TYPE 1.

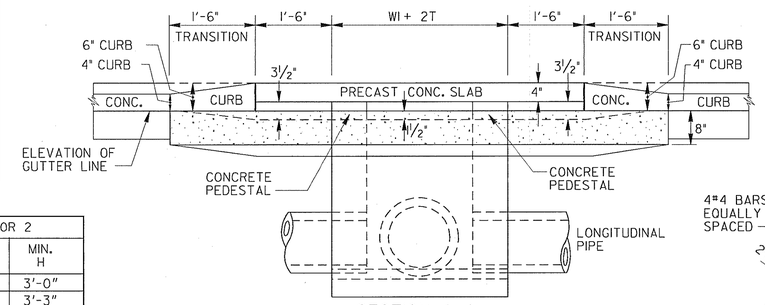

SECTION A-A

PRECAST CONCRETE SLAB

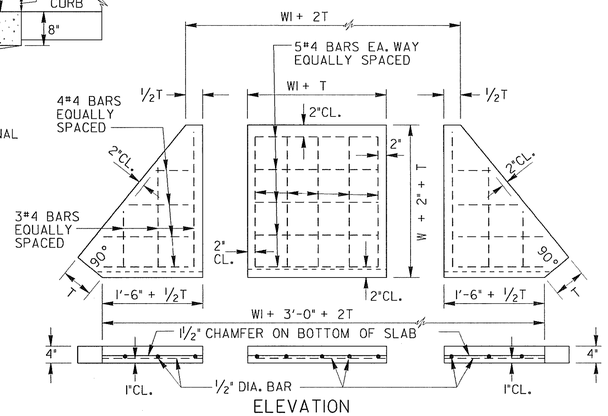

ELEVATION

NOTE: TOP SLAB TO BE CONSTRUCTED IN THREE SECTIONS AS SHOWN.

MODIFICATION FOR CATCH BASIN TYPE 2.
FOR USE ON SHORT RADIUS CURVES

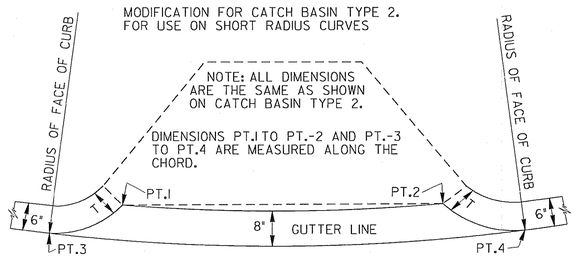

SPECIAL NOTE:
THIS STANDARD IS FOR USE ONLY WHERE IT IS NOT FEASIBLE TO USE OTHER CATCH BASIN OR DROP INLET DESIGNS.

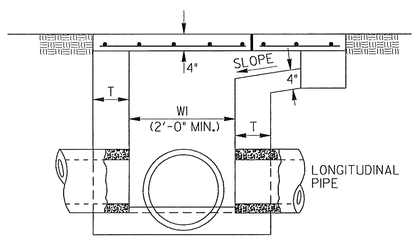

SECTION D-D

GENERAL NOTES:

1. SPECIFICATIONS: GEORGIA STANDARD, CURRENT EDITION & SUPPLEMENTS THERETO.

2. CATCH BASIN WALLS AND BOTTOM SHALL BE EITHER 8" BRICK MASONRY OR 6" CLASS A CONCRETE OR A COMBINATION OF BOTH. IF BOX PORTION OF CATCH BASIN IS PRECAST, ALL WALLS AND BOTTOM SHALL BE REINFORCED WITH EITHER #4 BARS AT 12" O.C. BOTH WAYS OR WITH 2/2, 6x6 WELDED WIRE FABRIC OR EQUAL, WITH 2" MIN. COVER OVER ALL STEEL. CAST-IN-PLACE CONCRETE WALLS AND BOTTOMS DO NOT REQUIRE REINFORCEMENT. ALTERNATE: BOTTOM PORTION OF STRUCTURE MAY BE CIRCULAR WITH ADAPTER TYPE 3 BETWEEN CIRCULAR AND SQUARE SECTIONS. (SEE STANDARD 1040.)

DATE	REVISION	BY

DEPARTMENT OF TRANSPORTATION
STATE OF GEORGIA

STANDARD
PRECAST OR BUILT IN PLACE
CATCH BASINS
MAXIMUM PIPE CONNECTION-18"
MAY BE USED IN 4 FT. MEDIAN

NO SCALE

REDR. FEB. 98

REV. & REDR. R.M.U. (SUBMITTED) STATE ROAD & AIRPORT DESIGN ENGR.
TRA. G.M.E.
CHK. R.K.C. (APPROVED) STATE HIGHWAY ENGINEER

NUMBER 1033B