STATE	PROJECT NUMBER	SHEET NO.	TOTAL SHEETS
GA.	EDS00-0545-00(018)	299	431

DIMENSION "D" IS MEASURED FROM TOP OF SLAB TO TOP OF BEAMS AT CENTERLINE BEARING. VARY "D" BETWEEN BEARINGS TO COMPENSATE FOR DEAD LOAD DEFLECTION. MAINTAIN A CONSTANT SLAB THICKNESS OF 7⅝"
"D" = 9½"

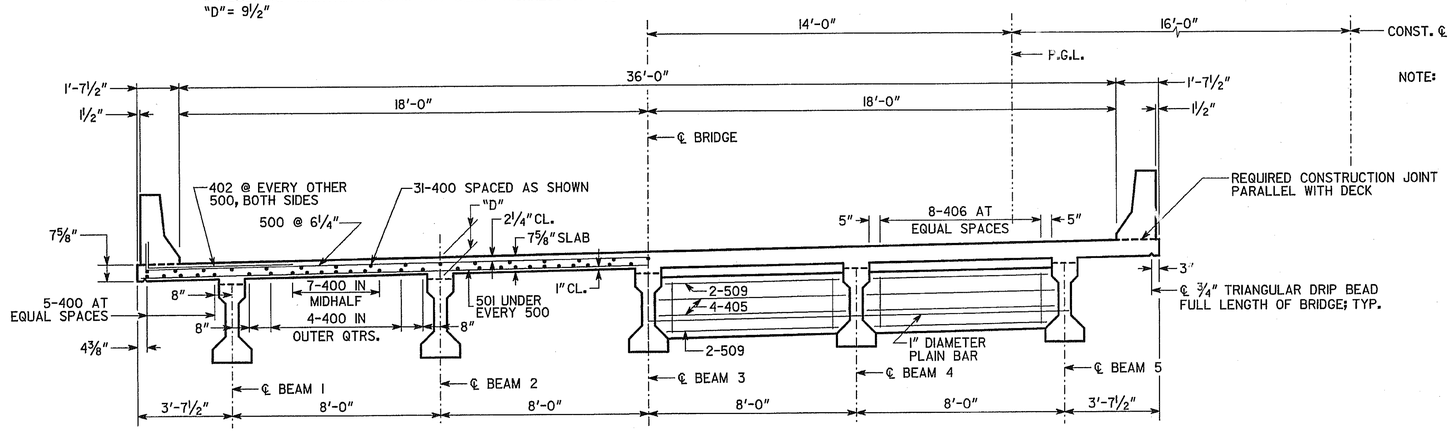

HALF SECTION THRU SLAB

HALF SECTION THRU DIAPHRAGM

NOTE: LEFT BRIDGE SHOWN. RIGHT BRIDGE SIMILAR.

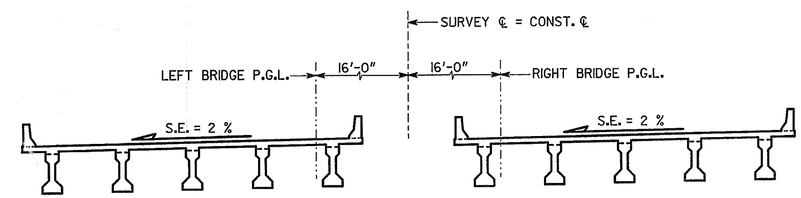

TYPICAL SECTION SCHEMATIC
(LOOKING AHEAD)
NO SCALE

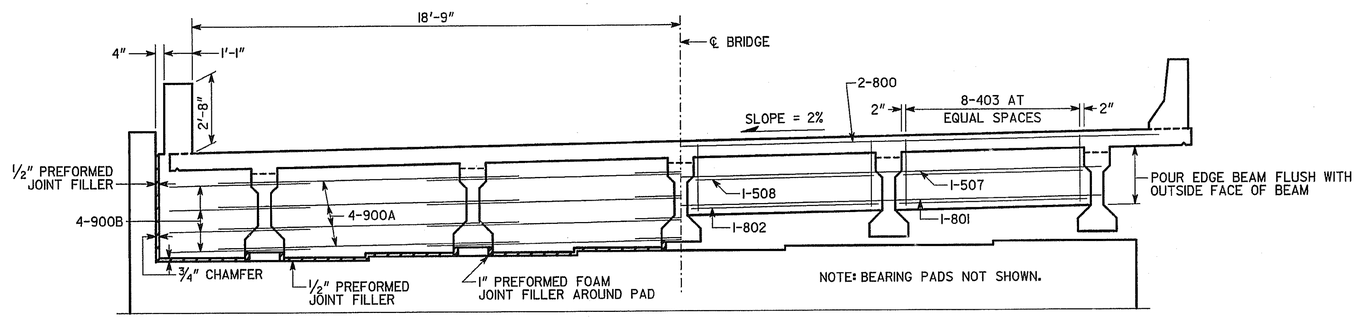

HALF SECTION THRU ENDWALL

HALF SECTION THRU EDGE BEAM

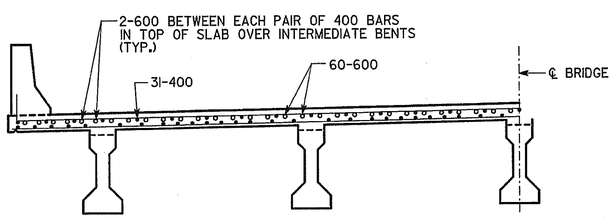

HALF SECTION THRU SLAB AT INTERMEDIATE BENT

BRIDGE NO. 3 LEFT AND RIGHT

GEORGIA
DEPARTMENT OF TRANSPORTATION
PRECONSTRUCTION DIVISION-OFFICE OF BRIDGE DESIGN

SUPERSTRUCTURE DETAILS
SR 4 (US 1) OVER OHOOPEE RIVER
EMANUEL COUNTY EDS00-0545-00(018)

SCALE: ⅜" = 1'-0" (UNLESS NOTED) NOVEMBER 2010

REVISIONS	BY	DATE

DRAWING NO. 35-38
BRIDGE SHEET 4 OF 11

DESIGNED WMD | CHECKED DLC | REVIEWED WEI
DRAWN WMC | DESIGN GROUP -- | APPROVED BFR

FILENAME: E22191OB3.DGN