STATE	PROJECT NUMBER	SHEET NO.	TOTAL SHEETS
GA.	EDS00-0545-00(018)	280	431

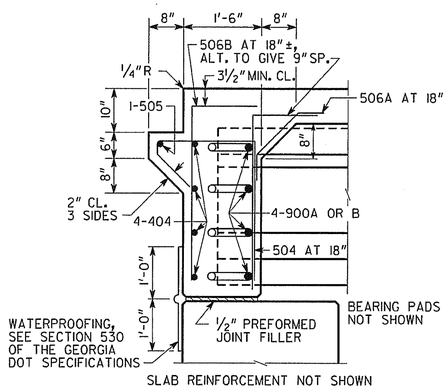

SECTION AT ENDWALL

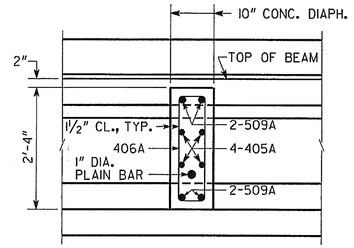

SLAB REINFORCEMENT NOT SHOWN

SECTION THRU DIAPHRAGM

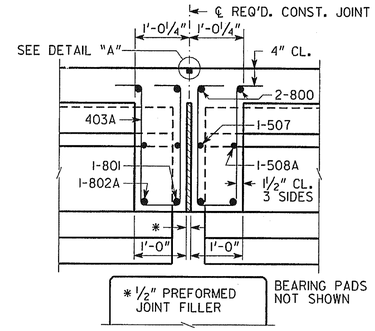

SLAB REINFORCEMENT NOT SHOWN

SECTION THRU EDGE BEAM

(BENT 2 SHOWN, BENTS 3 THRU 5, 10 SIMILAR)

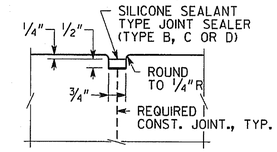

DETAIL "A"

NO SCALE

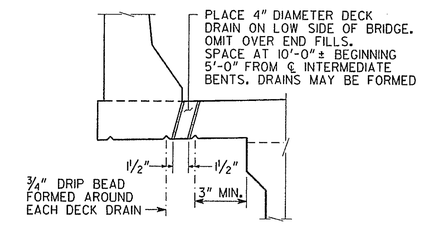

DECK DRAIN DETAIL

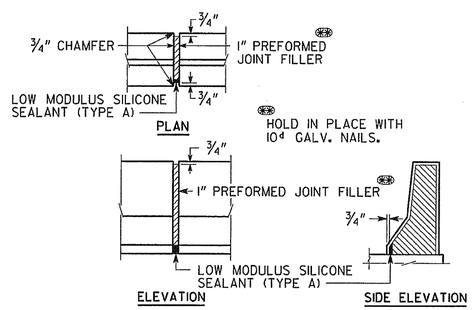

DETAILS OF 1" EXPANSION JOINT IN BARRIER

SCALE: 1/2" = 1'-0"

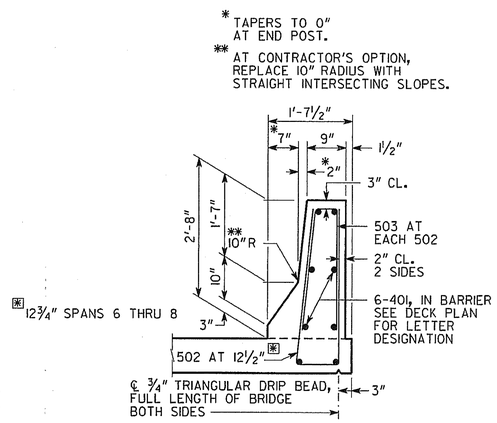

BARRIER DETAIL

JOINT OPENING (W) IN.			
TEMPERATURE (°F)	BENT 1	BENT 6	BENT 9
30	1 1/2"	1 9/16"	1 9/16"
70	1"	1"	1"
100	5/8"	5/8"	5/8"

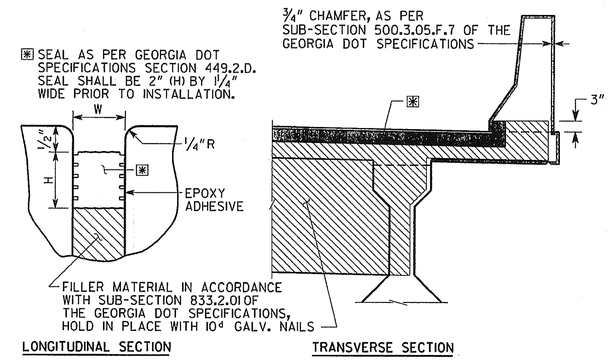

EXPANSION JOINT DETAILS

BENTS 1, 6 AND 9

NO SCALE

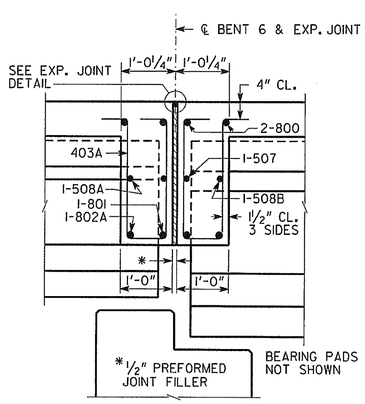

SLAB REINFORCEMENT NOT SHOWN

SECTION THRU EDGE BEAM

(BENT 6 SHOWN, BENT 9 SIMILAR BY ROTATION)

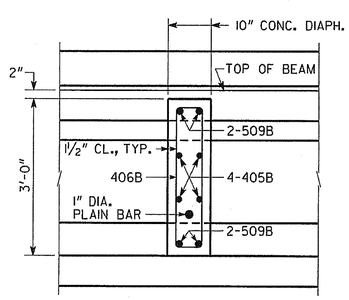

SLAB REINFORCEMENT NOT SHOWN

SECTION THRU DIAPHRAGM

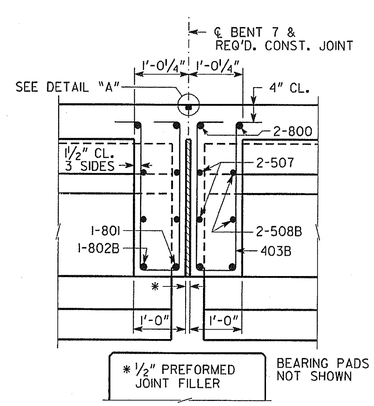

SLAB REINFORCEMENT NOT SHOWN

SECTION THRU EDGE BEAM

BENTS 7 AND 8

NOTES:

1. DO NOT SAW CUT OPENINGS.
2. FORM WIDTH OF JOINT OPENING BASED ON THE TEMPERATURE CHART SHOWN FOR AMBIENT TEMPERATURE AT TIME WHEN EDGE BEAMS ARE POURED.

BRIDGE NO. 2 LEFT AND RIGHT

GEORGIA

DEPARTMENT OF TRANSPORTATION

PRECONSTRUCTION DIVISION-OFFICE OF BRIDGE DESIGN

MISCELLANEOUS SUPERSTRUCTURE DETAILS

SR 4 (US 1) OVER OHOOPEE RIVER

EMANUEL COUNTY EDS00-0545-00(018)

SCALE: 3/4" = 1'-0" (UNLESS NOTED) NOVEMBER 2010

DRAWING NO. 35-19

BRIDGE SHEET 8 OF 23

REVISIONS | DATE | BY

DESIGNED WMD | CHECKED DLC | REVIEWED WEI

DRAWN WMC | DESIGN GROUP -- | APPROVED BFR

FILENAME: E22191GB2.DGN